GIRDERS (B1)

2016 CRC
R502.9

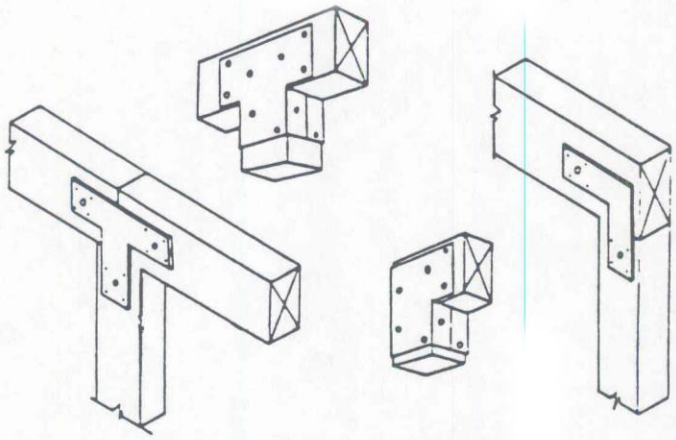

POST-TO-GIRDER CONNECTIONS

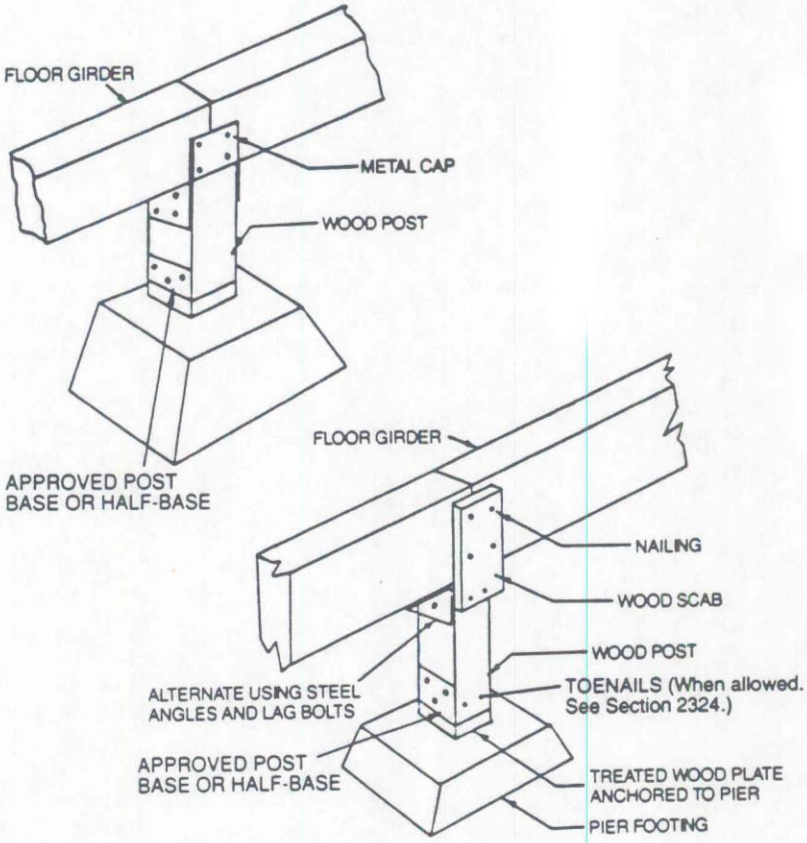

POST-GIRDER CONNECTION