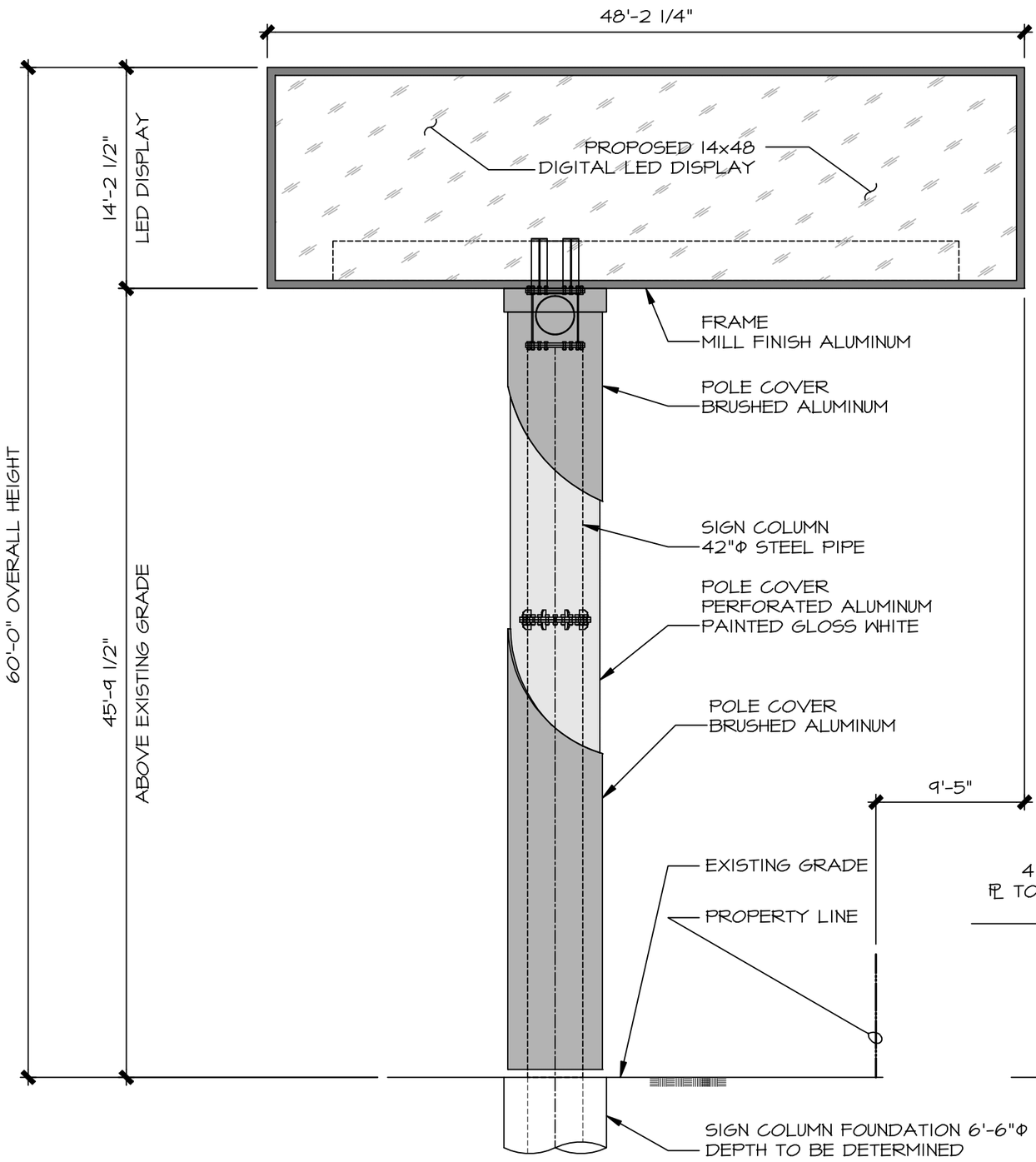

NORTH ELEVATION SCALE: 1/8" = 1'-0"

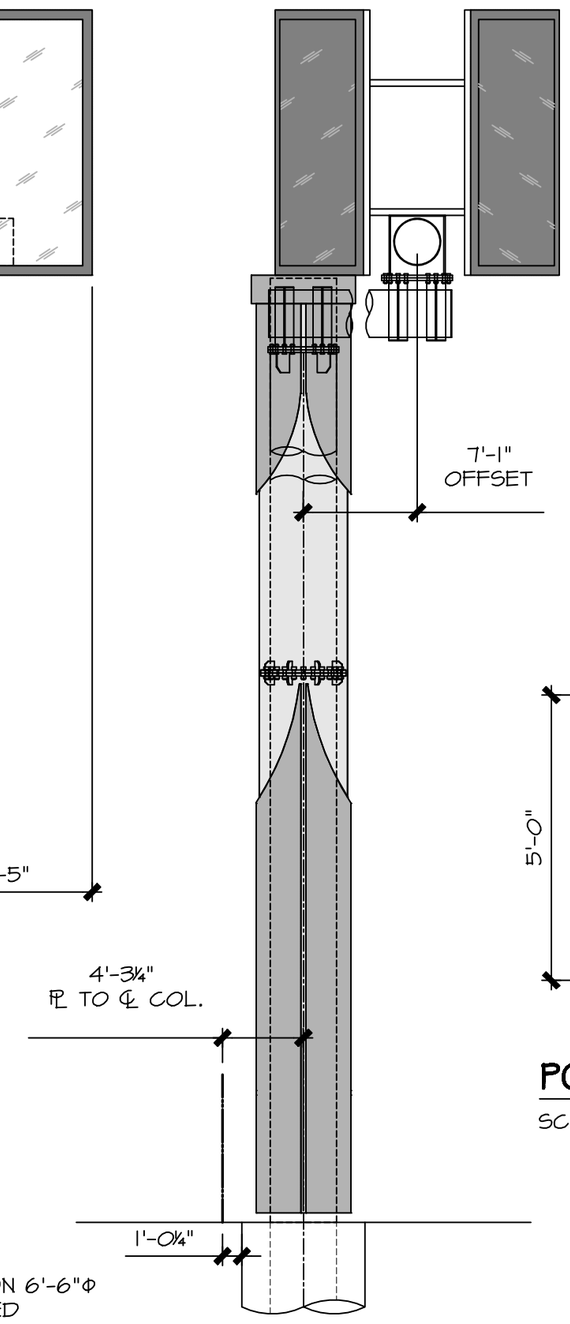

WEST ELEVATION SCALE: 1/8" = 1'-0"

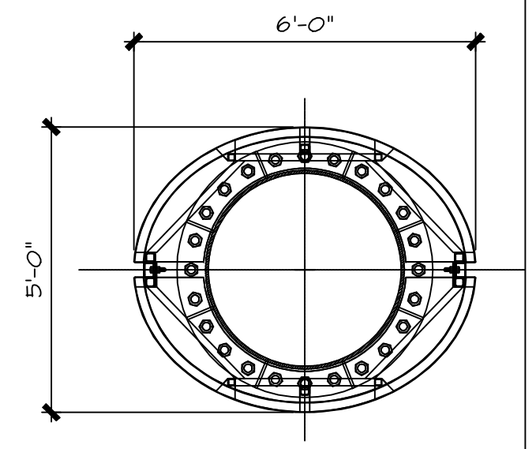

POLE COVER SECTION

SCALE: 3/8" = 1'-0"

Vincent Kevin Kelly & Assoc., Inc.
structural engineering consultants

3400 Airport Ave., Suite #99
Santa Monica, CA 90405
Web: www.vkkengineering.com
Email: vkk@vkkengineering.com
Tel: 310.397.3700 Fax: 310.397.8797

Date 07/11/2014 **Job #** 12031
Engr. VKK
Sheet 5 **of** 5

Client CLEAR CHANNEL OUTDOOR
Project 14'x48' DIGITAL ADVERTISING V-SIGN
1385 SHOREWAY ROAD, BELMONT, CA