COMMUNITY DEVELOPMENT
PERMIT CENTER

FACTORY BUILT CHIMNEYS

2007

CA MECHANICAL CODE 802.5

TABLE 8-1

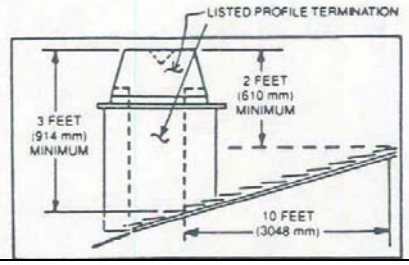

TERMINATE IN ACCORDANCE WITH 802.5.2

NOTE: SINCE THE ENTIRE TERMINATION IS LISTED, THE 3-FOOT (914mm) MEASUREMENT IS FROM THE ROOF SURFACE TO THE TOP OF THE TERMINATION. FIGURE 8-1

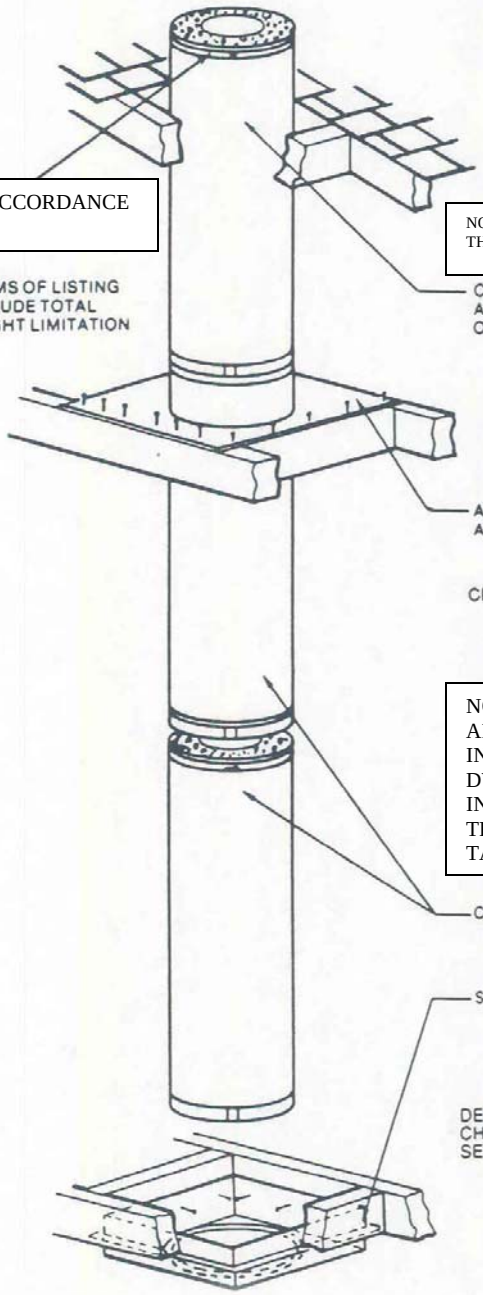

TERMS OF LISTING INCLUDE TOTAL HEIGHT LIMITATION

CLEARANCE TO ENCLOSURE WALLS AND ROOF STRUCTURE IS MARKED ON CHIMNEY SECTION.

A FIRE-STOP SPACER MUST BE USED AT EACH FLOOR AND CEILING PENETRATED

CLASSIFICATIONS:
(1) MEDIUM-HEAT APPLIANCE-TYPE
(2) RESIDENTIAL-APPLIANCE TYPE AND BUILDING HEATING APPLIANCE

NOTE: CHIMNEYS MARKED AS BUILDING HEATING APPLIANCE ONLY ARE NOT SUITABLE FOR INSTALLATION IN ONE OR TWO-FAMILY DWELLINGS. SUCH CHIMNEYS MUST BE ENCLOSED IN A NONCOMBUSTIBLE (MASONRY) SHAFT AND TREATED AS METAL CHIMNEYS (SMOKESTACKS). TABLE 8-2

CHIMNEY SECTION

SUPPORT ASSEMBLY

DEFINITION: A FACTORY-BUILT CHIMNEY IS A LISTED CHIMNEY—SEC. 205