COMMUNITY DEVELOPMENT PERMIT CENTER

CALIFORNIA
CITY OF BELMONT

NONMETALLIC SHEATHED CABLE PROTECTION

2001 CEC 300-4 (D)

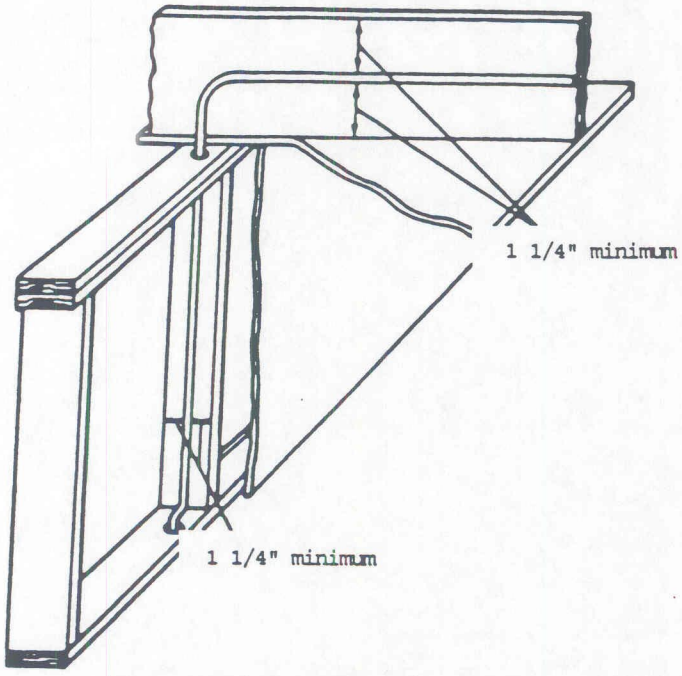

Parallel installation of cables and raceways can be installed closer than 1 1/4 inches from the edge of the framing member if physical protection is provided

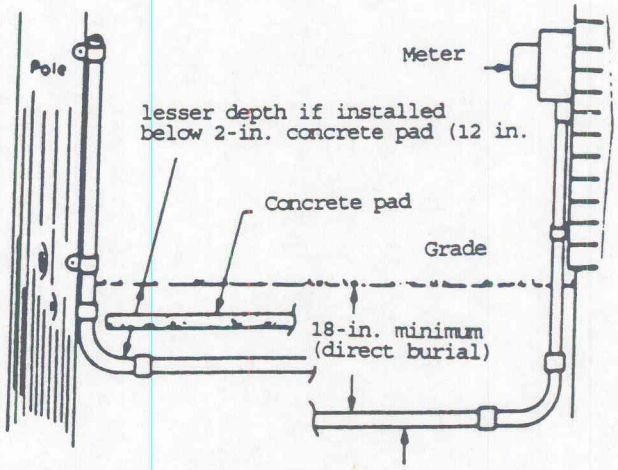

Rigid nonmetallic conduit and fittings may be directly buried in earth at a depth not less than 18 in.

exceed 600 V

1070 SIXTH AVENUE, SUITE 309 BELMONT, CALIFORNIA 94002-3867 (650-595-7422)