CALIFORNIA
CITY OF BELMONT

CEILING FAN BOX

2001 CEC 370-27 (C) 422-18

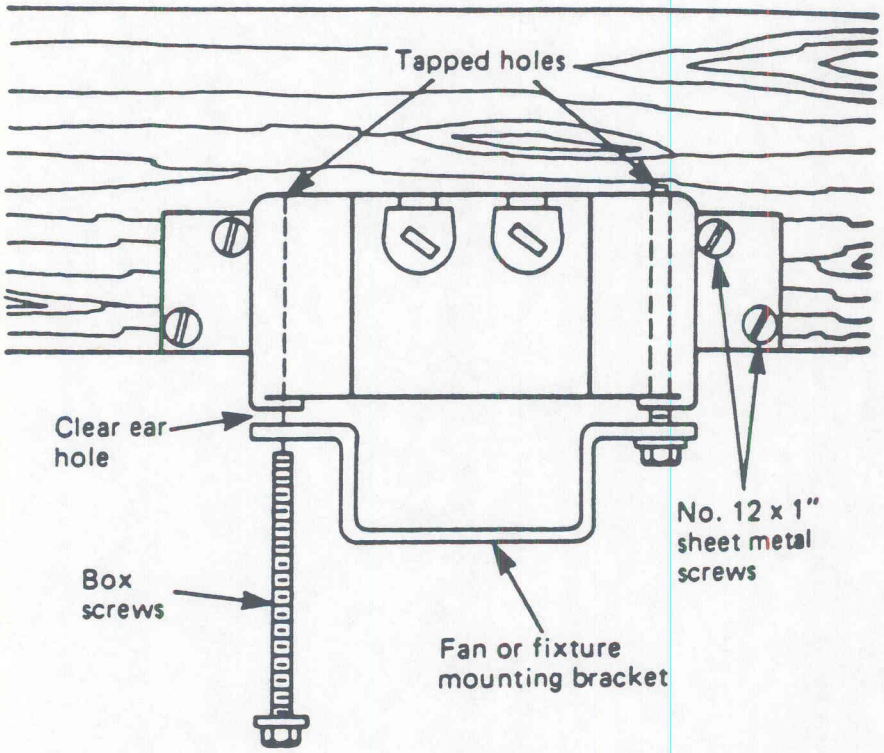

422-18. Support of Ceiling Fans. Listed ceiling fans that do not exceed 35 pounds (15.88 kg) in weight, with or without accessories, shall be permitted to be supported by outlet boxes identified for such use and supported in accordance with Sections 370-23 and 370-27.

Section 370-23 requires boxes to be rigid and securely fastened in place. Section 370-27 does not permit standard type boxes to support ceiling fans unless they are provided with supplemental support as shown in Figure 370-8. Supplemental support is not required for listed boxes identified for fan support. Section 422-18 above permits boxes identified for fan support to be used to support listed ceiling fans that do not exceed 35 pounds. See Figure 422-2.