# COMMUNITY DEVELOPMENT PERMIT CENTER

CALIFORNIA
CITY OF BELMONT

# WATER HEATER BRACHING STRAIGHT WALL

**2001 UPC 510.5**

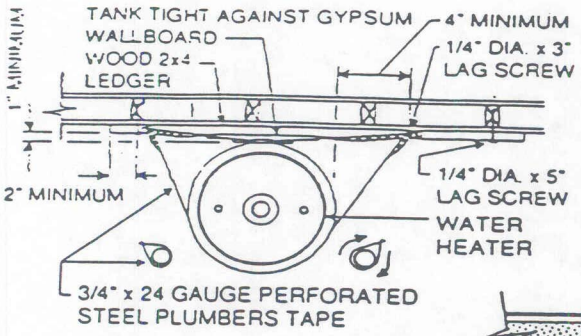


PLAN

MATERIALS NEEDED
- GYPSUM WALLBOARD (FIRE RESISTANT DRYWALL)
- 24 GAUGE WIRE
- 2- 2x4 x 4'-0" TO 6'-0" LONG
- 4- 10' LENGTHS 3/4" x 24 GAUGE PERFORATED PLUMBERS TAPE
- 4- 1/4" x 5" LAG SCREWS
- 4- 1/4" x 3" LAG SCREWS

TOOLS NEEDED.
- POWER DRILL
- 1- 1/4" DRILL BIT
- 1- 3/16" DRILL BIT
- STUD FINDER
- MEASURING TAPE
- 7/16" OPEN END OR ADJUSTABLE WRENCH

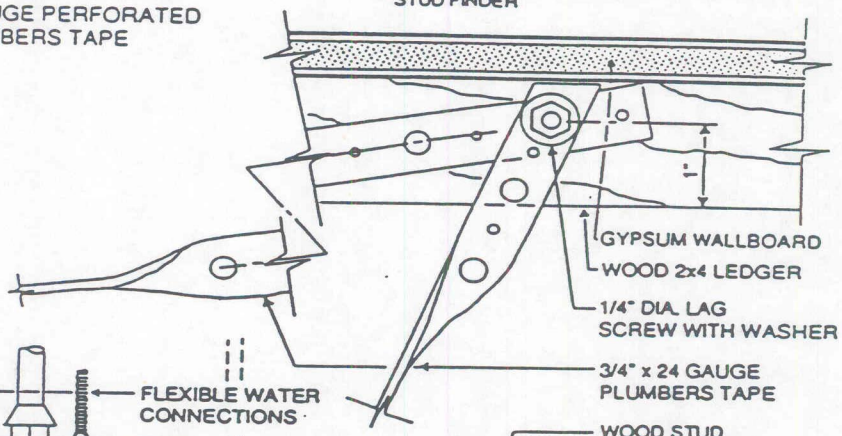


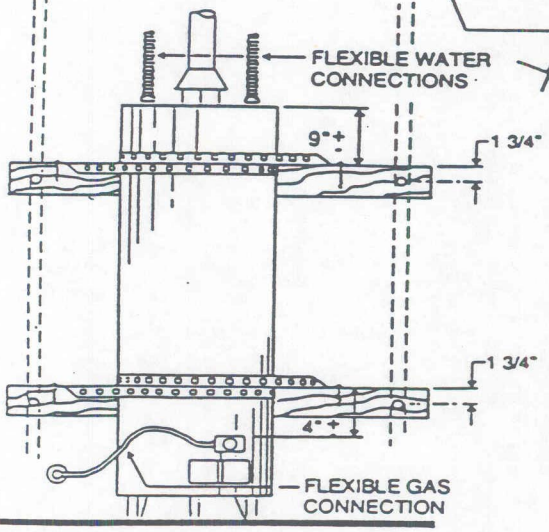


ELEVATION

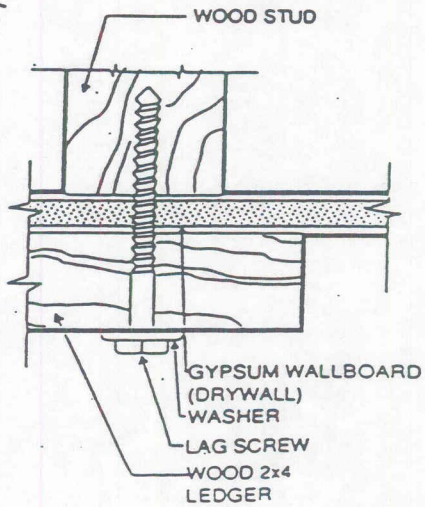


1070 SIXTH AVEENUE, SUITE 309 BELMONT, CALIFORNIA 94002-3867 (650-595-7422)