COMMUNITY DEVELOPMENT
PERMIT CENTER

CALIFORNIA
CITY OF BELMONT

DRINKING FOUNTAINS
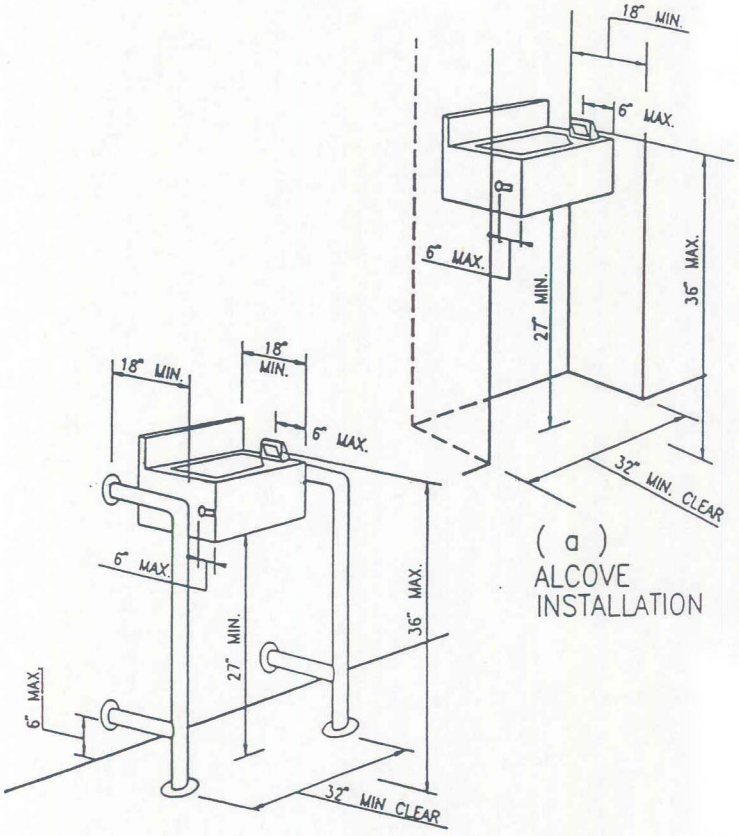
1998 THE CAL ASIM
P.82, 83.