WHEELCHAIR CLEAR FLOOR SPACE

2007 CA ACCESSIBILITY REQUIREMENTS

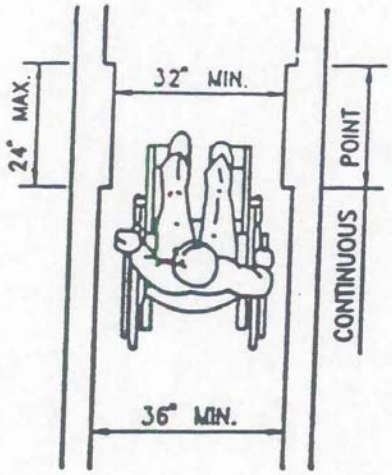

MINIMUM CLEAR WIDTH FOR SINGLE WHEELCHAIR

FIGURE 31-10

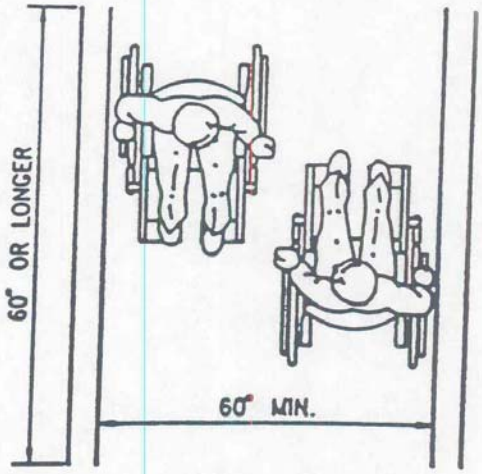

MINIMUM CLEAR WIDTH FOR TWO WHEELCHAIRS

FIGURE 11B-11

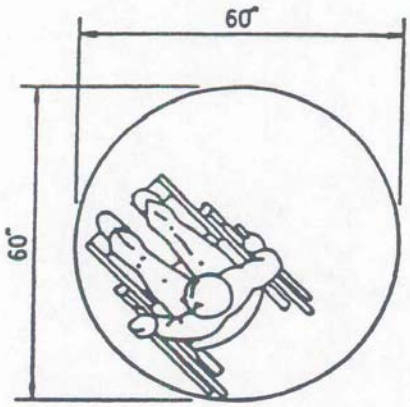

(a)
60" DIAMETER SPACE

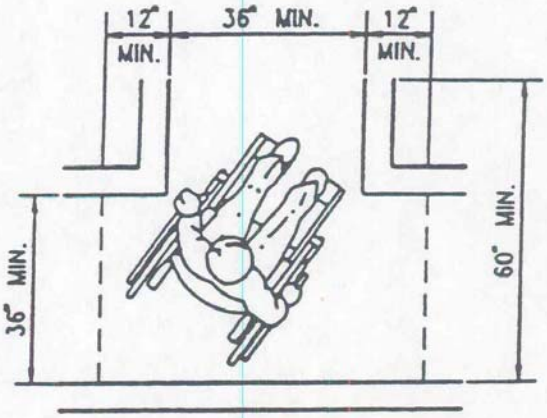

(b)
T-SHAPED SPACE FOR 180° TURNS

WHEELCHAIR TURNING SPACE

FIGURE 11B-12