COMMUNITY DEVELOPMENT PERMIT CENTER

CALIFORNIA
CITY OF BELMONT

RESTROOMS

1998 CAL ASIM P. 71

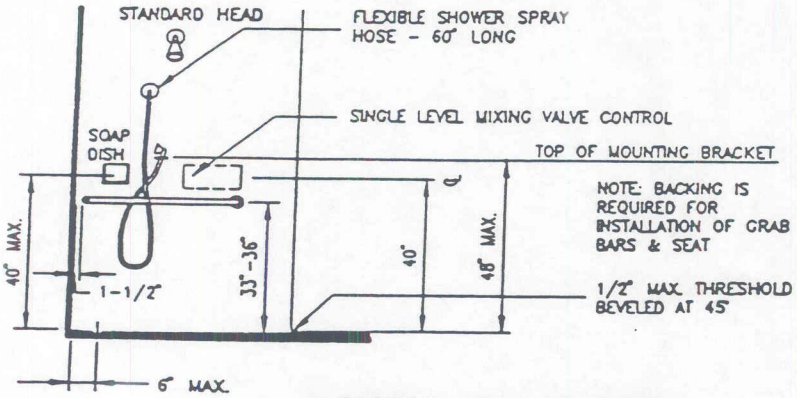

Extend bench to opening and place controls on wall adjacent to bench to meet ADAAG performance standard.

OPEN SHOWER

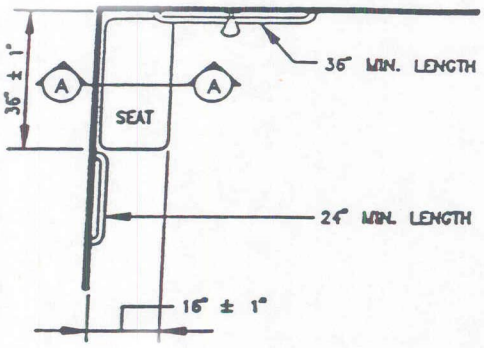

PLAN

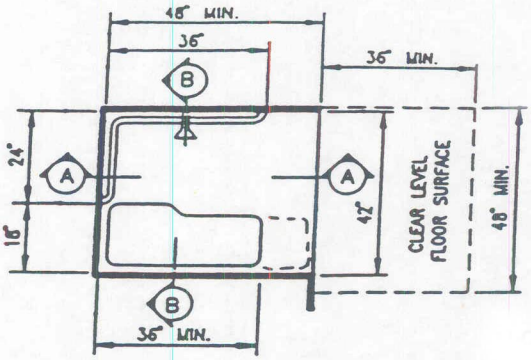

SHOWER STALL

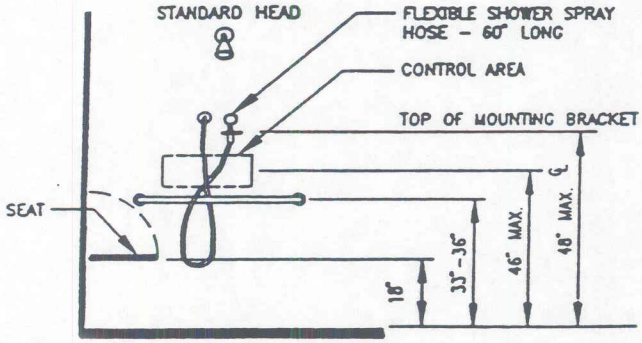

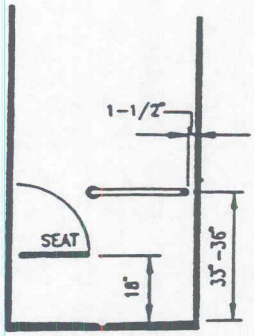

1070 SIXTH AVEENUE, SUITE 309 BELMONT, CALIFORNIA 94002-3867 (650-595-7422)