CITY OF BELMONT
COUNTY OF SAN MATEO
STATE OF CALIFORNIA

STANDARD DETAIL DRAWINGS FOR CONSTRUCTION

MEMBERS OF THE CITY COUNCIL

PAMELA RIANDA	MAYOR
CORALIN FEIERBACH	VICE MAYOR
ADELE DELLA SANTINA	MEMBER
TERRI COOK	MEMBER
ELEANORE HAHN	MEMBER

STAFF

SUSAN WESTMAN	City Manager
JOHN E. CURTIS, P.E.	Director - Department of Public Works

These drawings are a complement to the Standard Specifications of the City of Belmont adopted by the City Council on May 28, 1991. These drawings replace all previous versions of the City Standard Detail Drawings.

3rd Printing: November 10, 1994

Latest Edition: August 17, 1992

i:\pwdfiles\office97\speccov.doc

TABLE OF CONTENTS

Section 1 ..... Street Improvements
Section 2 ..... Sanitary Sewer and Sanitation
Section 3 ..... Flood Control and Storm Drain Facilities
Section 4 ..... Street Lighting and Traffic Signals
Section 5 ..... Street Trees and Tree Protection
Section 6 ..... Traffic Signals

SECTION ONE

STREET IMPROVEMENTS

Table of Contents

SI-100 ..... Street, Curb, Gutter, Sidewalk
SI-101 ..... Residential Driveway Approach
SI-102 ..... Standard Commercial Driveway Approach (2 sheets)
SI-103 ..... Typical Sections of Curb, Gutter and Sidewalk
SI-104 ..... Typical Section of Rolled Type Curb and Gutter
SI-105 ..... Wheelchair Ramp Detail No. 1 (3 sheets)
SI-106 ..... Sidewalk in Comm'l Areas - Redevelopment District
SI-107 ..... Typical City Raised Pavement Markers
SI-108 ..... Street Survey Monument and Box
SI-109 ..... Curb Drain
SI-110 ..... Barricades for Dead End Streets
SI-111 ..... Trench Detail
SI-112 ..... Standard Street Name Sign

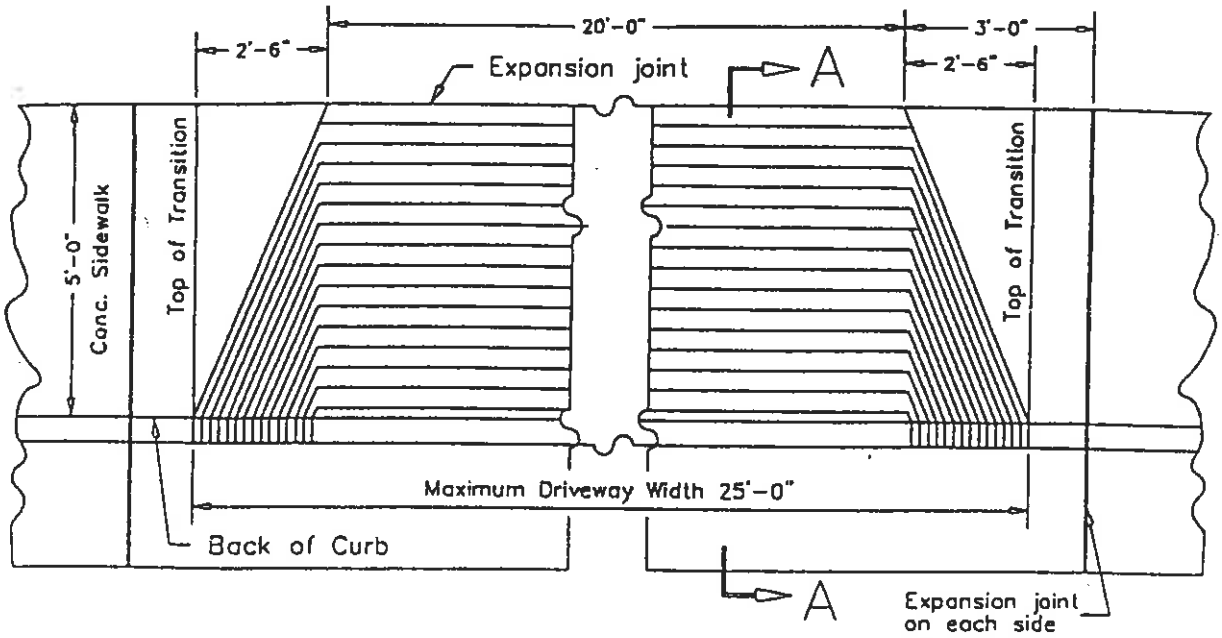

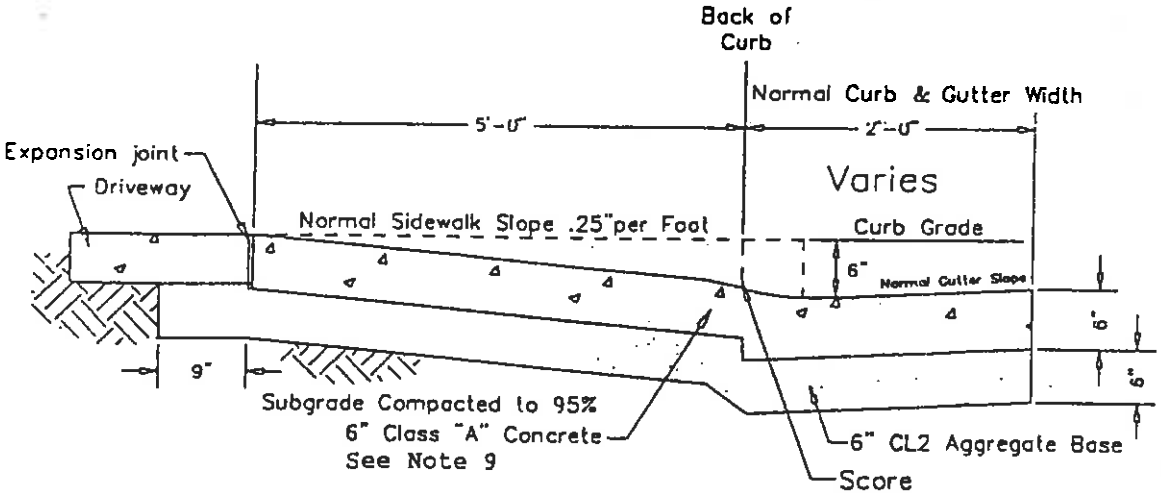

SECTION A–A

NOTES:

1. No driveway shall be constructed within 10 feet of a curb return.
2. Saw-cut existing curb, gutter and sidewalk prior to the removal of concrete.
3. Install expansion joints at the rear of approach and on each side of the driveway through the curb and gutter.
4. A 1" weakened plane joint shall be installed at a maximum interval of 10 feet.
5. Forms shall be approved by a the City of Belmont Public Works representative prior to the placement of concrete.
6. Contact outside Agencies directly for additional conditions or permits.
7. Encroachment Permit is required for work within a Public right of way or Public easement.
8. Conform with all Federal or State safety regulations and recommendations including trench shoring (Labor Code Section 6705) and traffic control.
9. Other material may be used provided three conditions are met:
   a. The material is non-porous, crack resistant and has a similar strength to Class "A" concrete.
   b. The appearance of the material is acceptable to the Belmont Community Development Department.
   c. The resident is willing to sign a maintenance agreement, recorded against their property. The agreement would require the property owner(s) to replace the driveway approach at their cost, each time a utility agency removes part of it to maintain pipes or conduits, and to replace it at the end of its life.
10. It is preferred that the concrete be placement be monolithic - if not, it is required that the contractor place 12" dowels (18" on center) between the back of curb and the approach.

REV.	DATE	CHECKED	
0	8/92	E.J.	

GENERAL NOTES

APPROVED

CITY ENGINEER

CITY OF BELMONT

STANDARD DETAIL

RESIDENTIAL DRIVEWAY APPROACH

SHEET SI–101

REV. 1

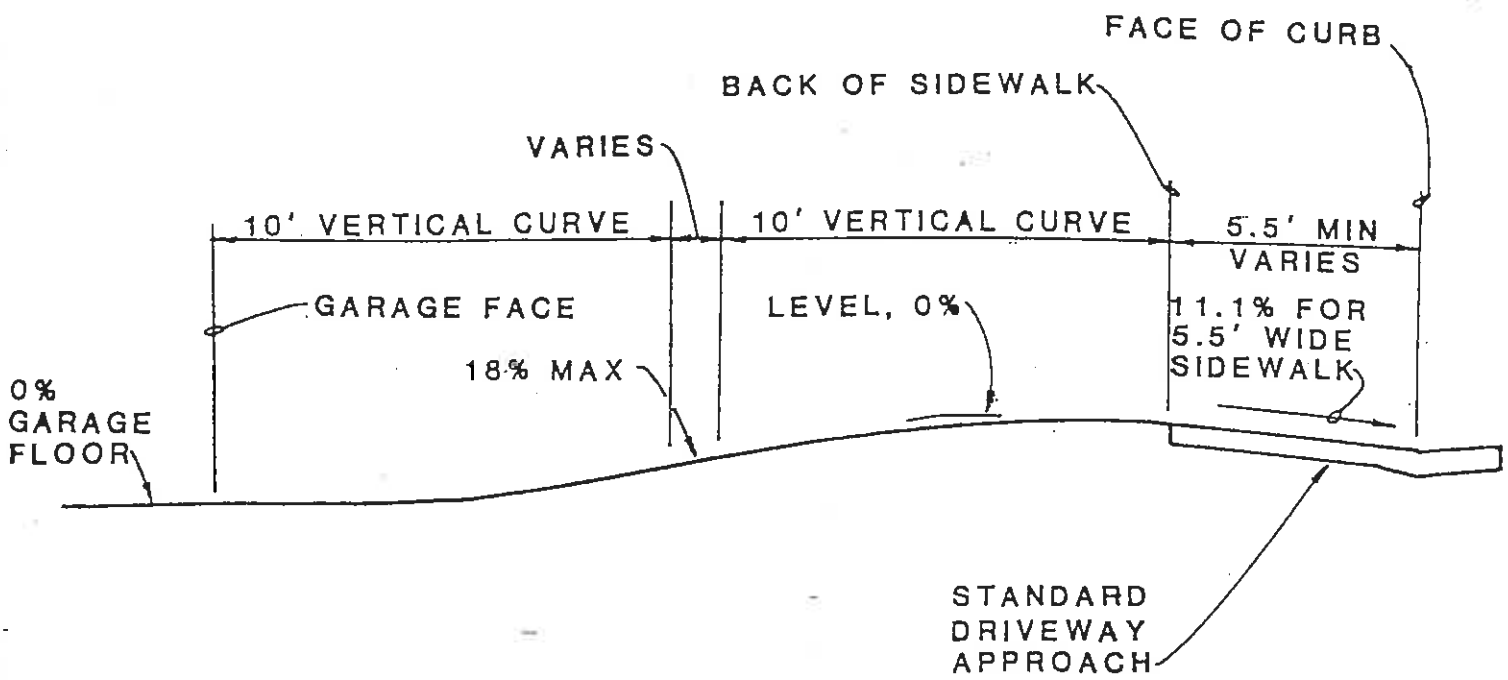

DOWN RAMP PROFILE

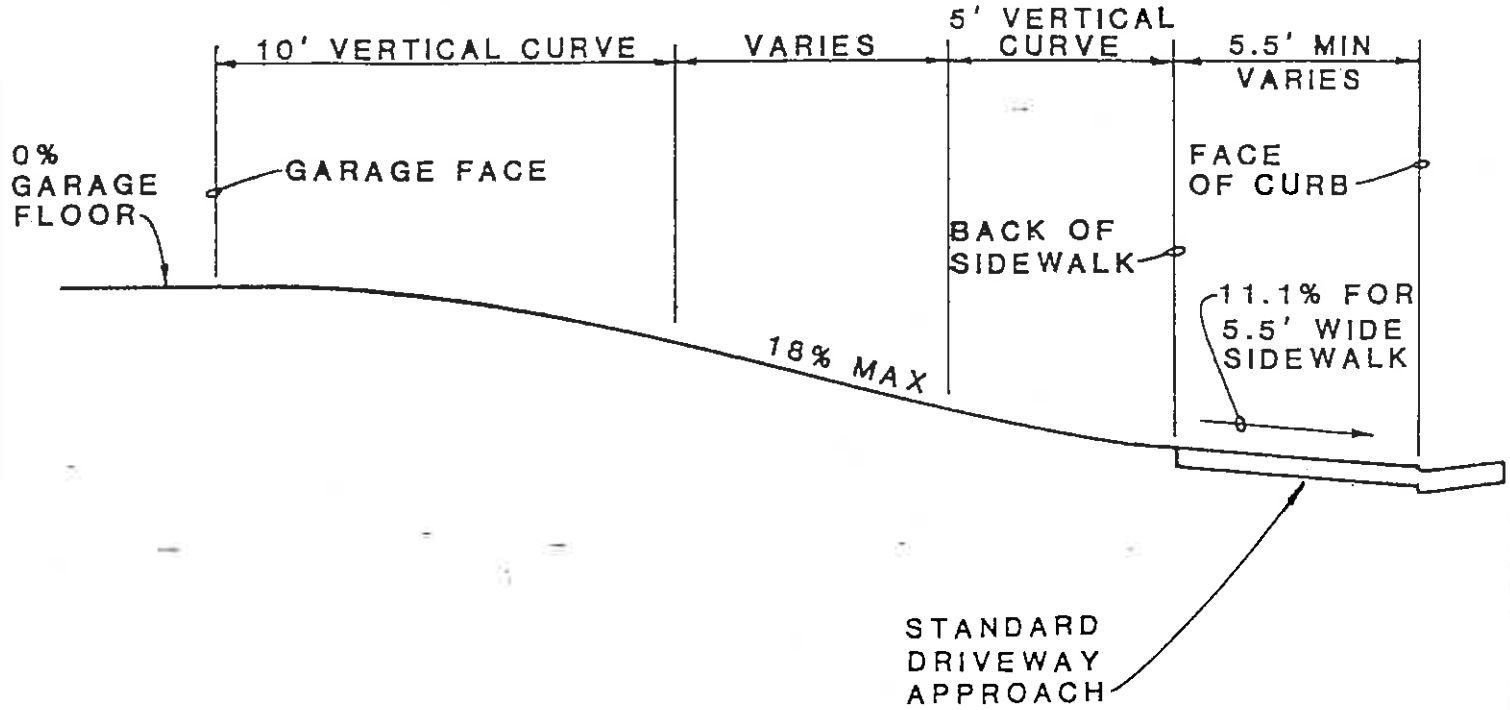

UP RAMP PROFILE

SI-101A

CITY OF BELMONT

TYPICAL DRIVEWAY

OR RAMP PROFILE

SCALE: NONE	
DATE: 8/11/94	
DRAWN BY: TJP	
SHEET 1 OF 1	

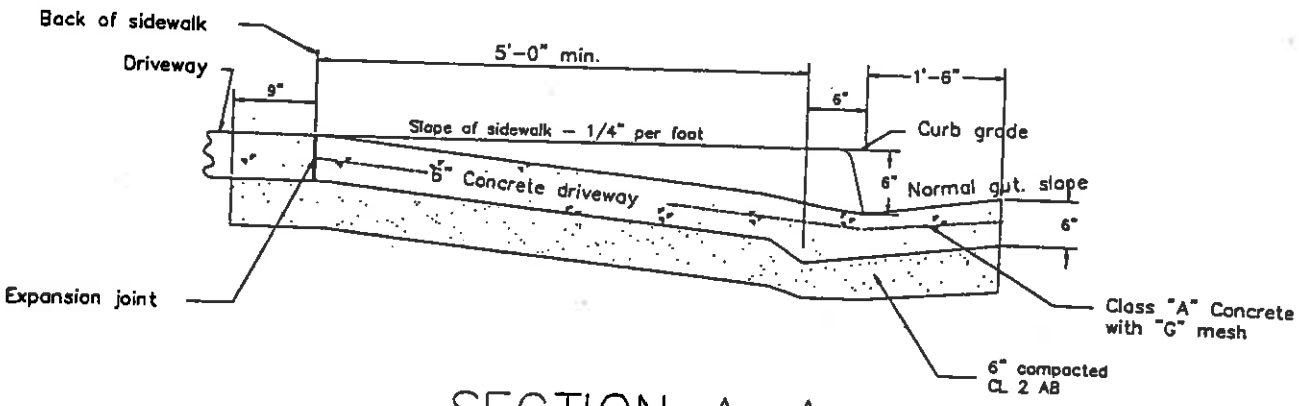

SECTION A–A

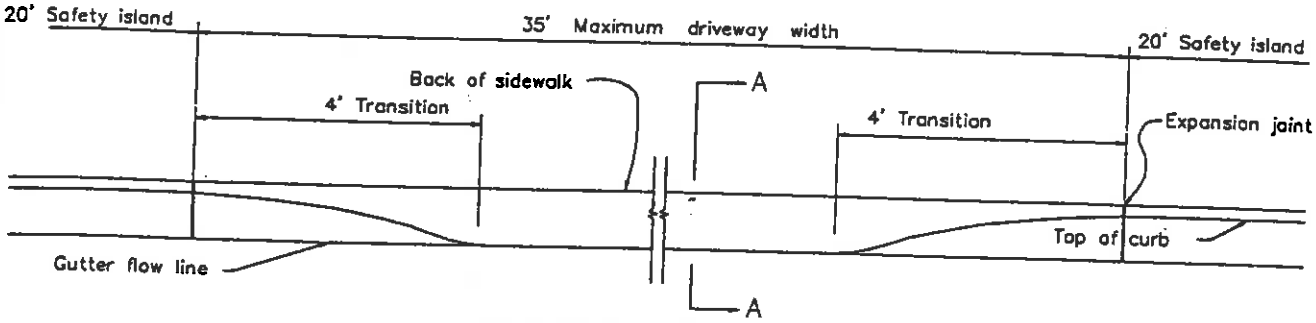

PROFILE

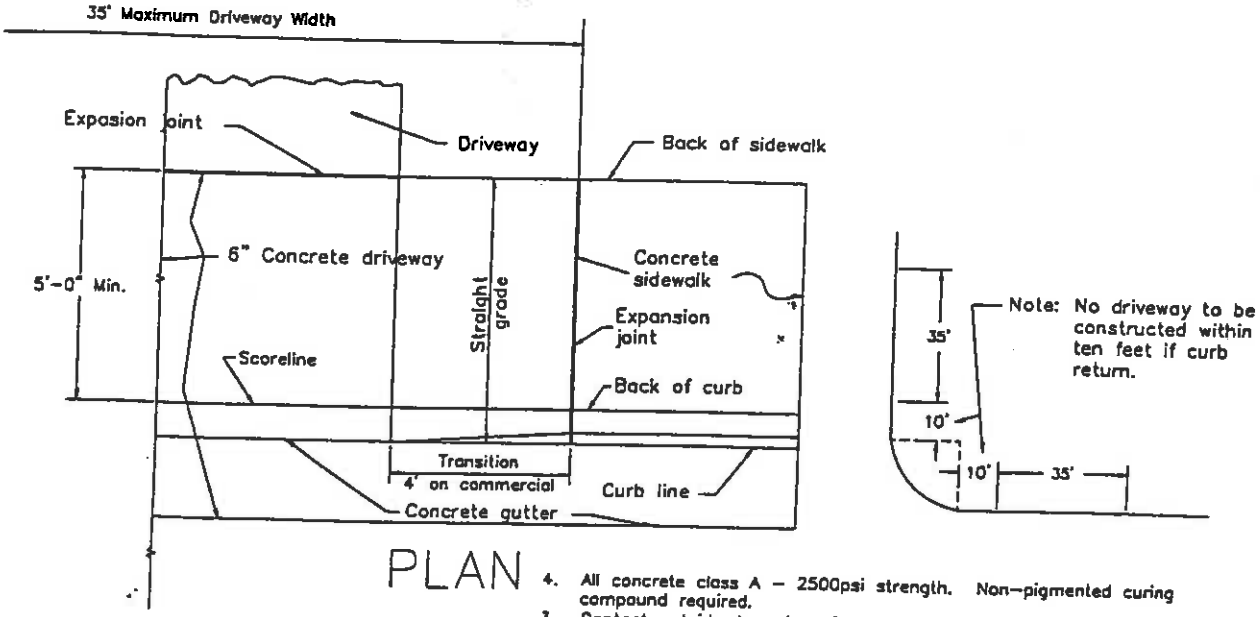

PLAN

4. All concrete class A – 2500psi strength. Non-pigmented curing compound required.
3. Contact outside Agencies directly for additional conditions or permits.
2. Encroachment Permit required for work within a Public easement/ r.o.w.
1. Conform with all Federal or State safety regulations and recommendations including trench shoring (Labor Code Section 6705) and traffic control.

REV.	DATE	CHECKED	
0	4/92	E. M.	

GENERAL NOTES

APPROVED

CITY ENGINEER

CITY OF BELMONT

STANDARD DETAIL

STANDARD COMMERCIAL DRIVEWAY APPROACH

SHEET 1of2

SI–102

REV. 0

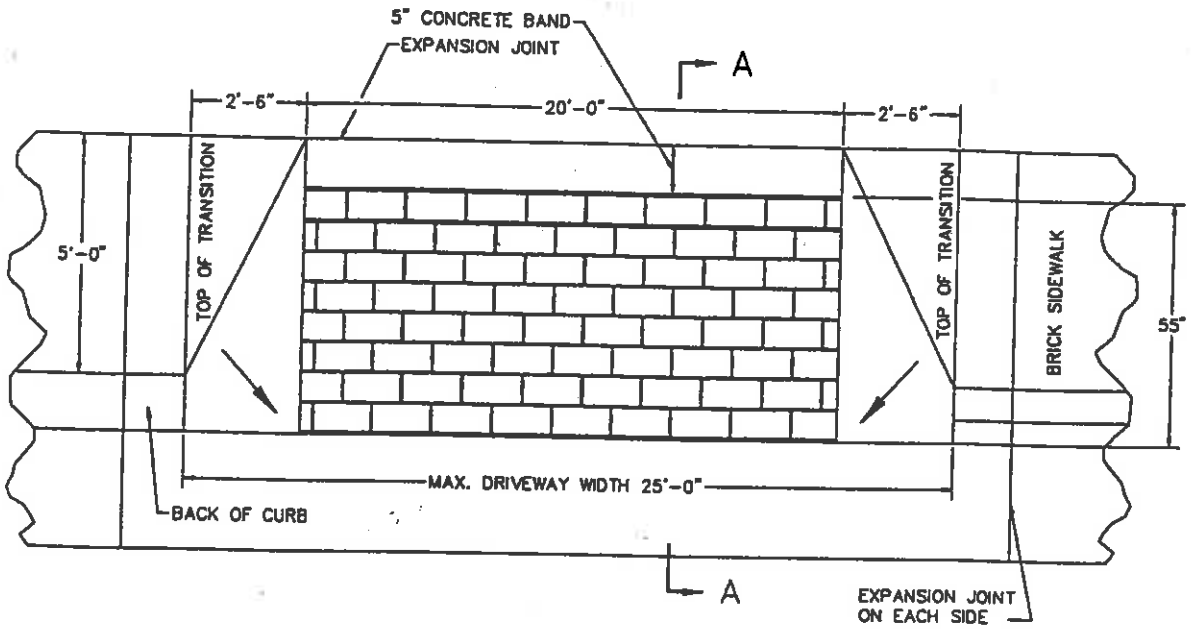

DRIVEWAY APPROACH PLAN

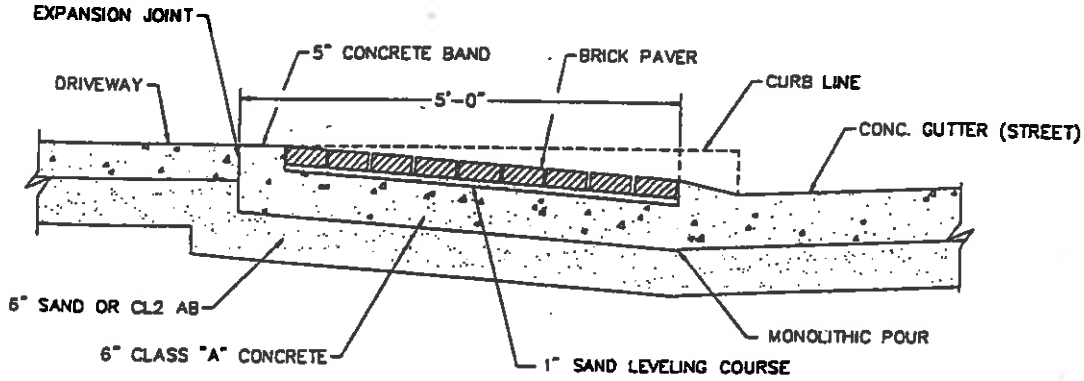

SECTION A–A

BRICK PAVER MATERIAL
TYPE: HOLLAND
COLOR: B2
MFG: PACIFIC PAVING STONE INTERLOCK
P.O. BOX 1480
CUPERTINO, CA 95015

NOTES:

1. NO DRIVEWAY TO BE CONSTRUCTED WITHIN 10 FEET OF CURB RETURN.
2. SAW-CUT EXISTING CURB, GUTTER & SIDEWALK PRIOR TO REMOVAL OF CONCRETE.
3. INSTALL EXPANSION JOINTS AT REAR OF APPROACH & ON EACH SIDE OF DRIVEWAY THROUGH THE CURB & GUTTER.
4. A 1" DEEP WEAKEND PLANE JOINT SHALL BE INSTALLED AT MAX. INTERVAL OF 10 FEET.
5. FORM TO BE APPROVED BY CITY OF BELMONT REPRESENTATIVE PRIOR TO PLACEMENT OF CONCRETE.
6. All concrete class B, $f'c$=3000psi minimum. Non-pigmented curing compound required.
7. Contact outside Agencies directly for additional conditions or permits.
8. Encroachment Permit required for work within a Public easement/ r.o.w.
9. Conform with all Federal or State safety regulations and recommendations including trench shoring (Labor Code Section 6705) and traffic control.

NOT TO SCALE

REV.	DATE	CHECKED	
0	8/92	E.U.	

GENERAL NOTES

APPROVED

CITY ENGINEER

CITY OF BELMONT

STANDARD DETAIL

DRIVEWAY APPROACH
IN COMMERCIAL AREAS

SHEET 2of2

SI–102

REV. 0

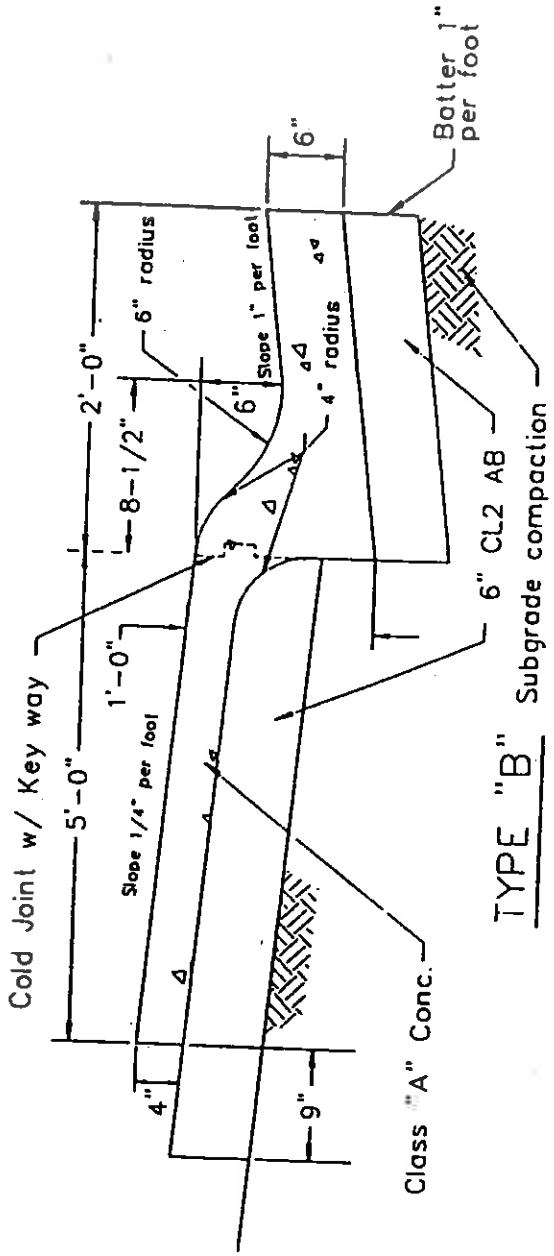

TYPE "B"

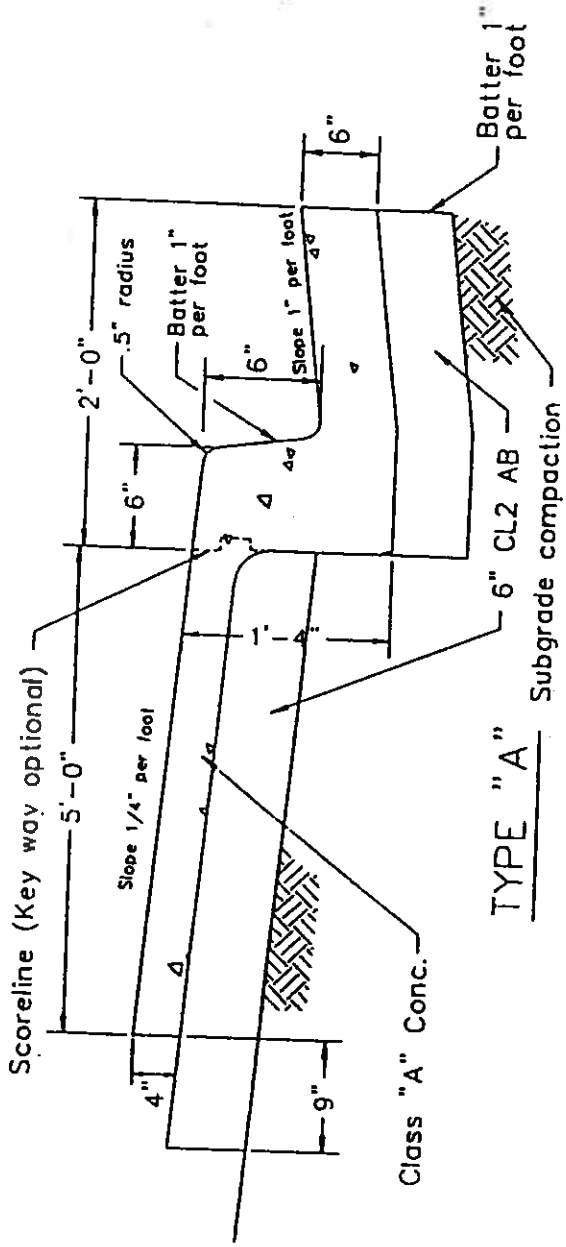

TYPE "A"

1. Forms to be Approved by City prior to placing concrete.
2. Grade control for Top of Rolled curb required
3. Contact outside Agencies directly for additional conditions or permits.
4. Encroachment Permit required for work within a Public easement/ r.o.w
5. Conform with all Federal or State safety regulations and recommendations including trench shoring (Labor Code Section 6705) and traffic control.

REV.	DATE	CHECKED
0	4/92	E.J

APPROVED

CITY ENGINEER

CITY OF BELMONT

GENERAL NOTES

STANDARD DETAIL

TYPICAL SECTIONS OF CURB, GUTTER AND SIDEWALK

SHEET SI-103

REV. 0

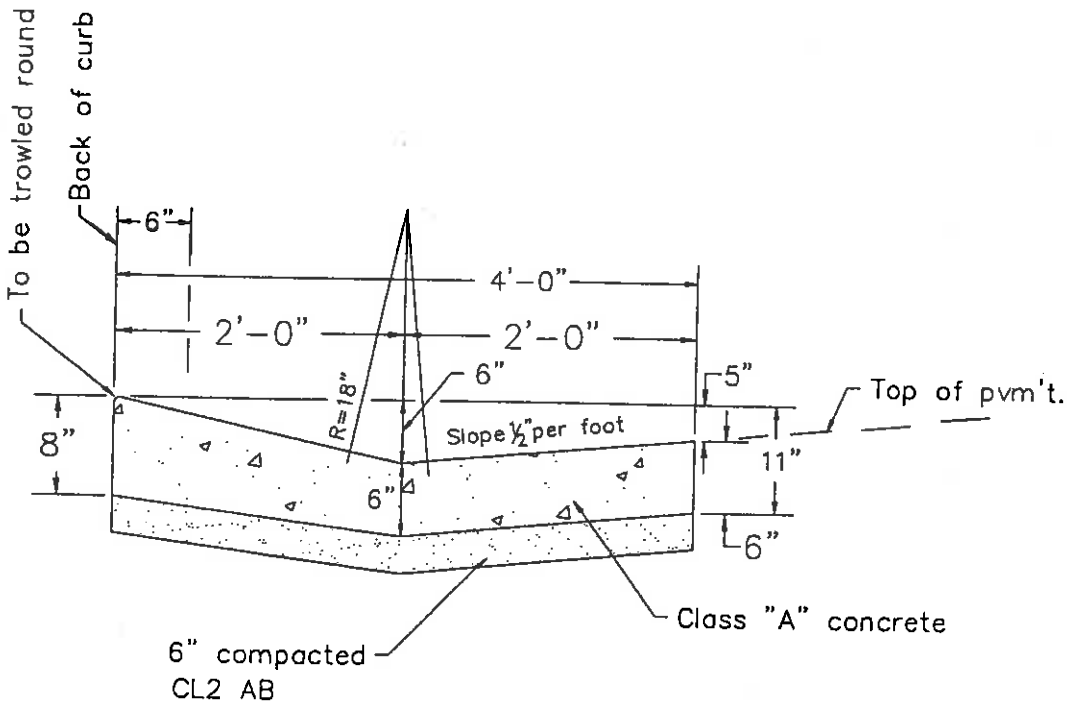

TYPE C

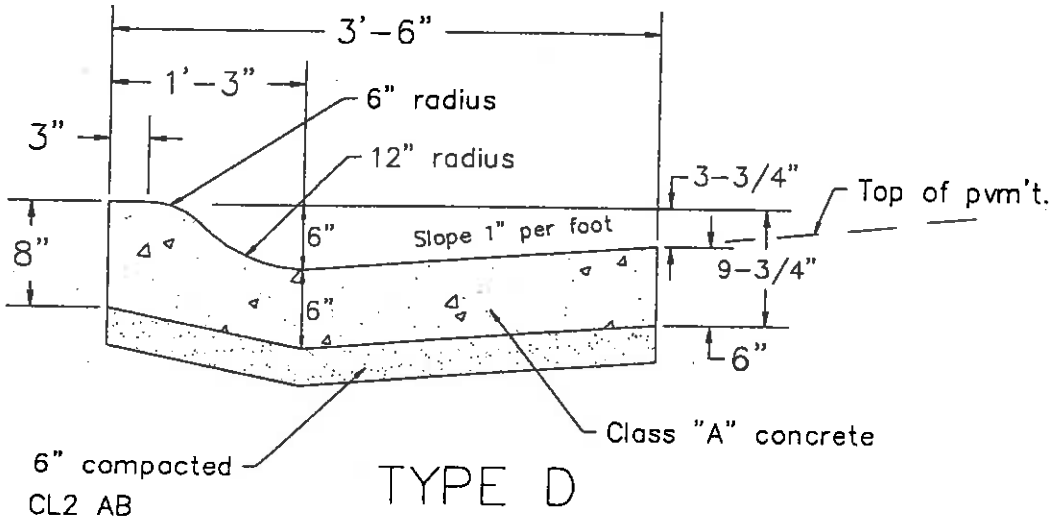

TYPE D

5. Caltrans Type E and A2-6 maybe used with permission.
4. Forms to be approved by City prior to placing concrete.
3. Contact outside Agencies directly for additional conditions or permits.
2. Encroachment Permit required for work within a Public easement/ r.o.w.
1. Conform with all Federal or State safety regulations and recommendations including trench shoring (Labor Code Section 6705) and traffic control.

REV.	DATE	CHECKED	
0	1/2/92	E. U.	

GENERAL NOTES

APPROVED

CITY ENGINEER

CITY OF BELMONT

STANDARD DETAIL

TYPICAL SECTION OF ROLLED TYPE CURB AND GUTTER

SHEET SI-104 REV. 0

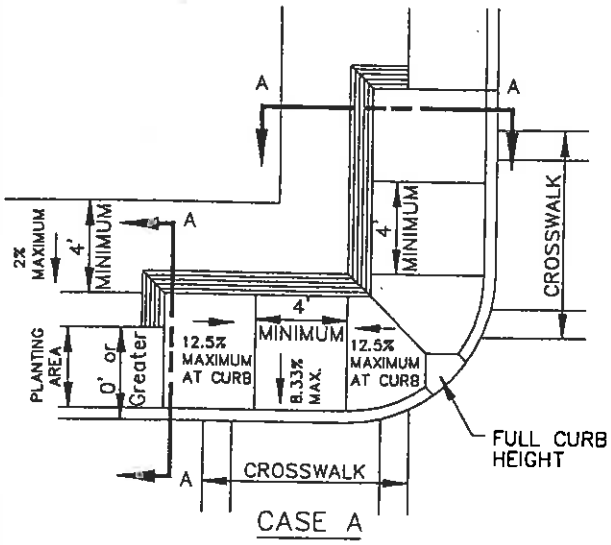

CASE A

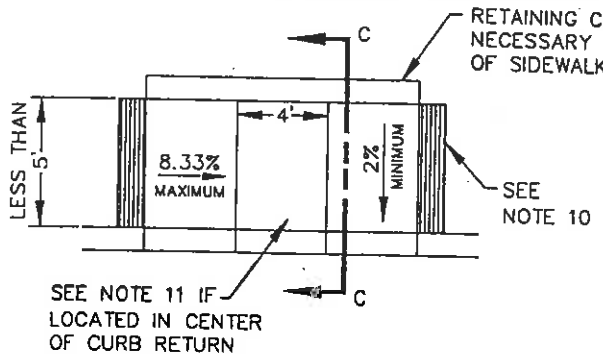

CASE C

(Sidewalk less than 5' wide)

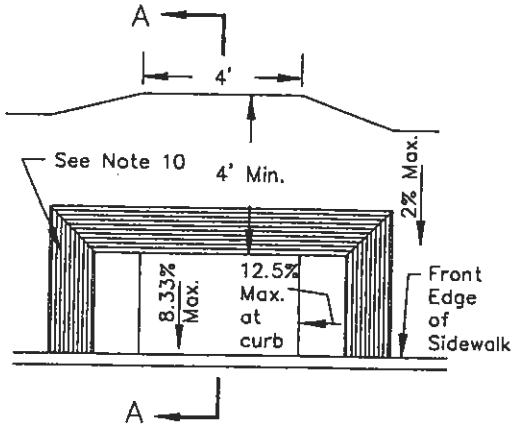

CASE D

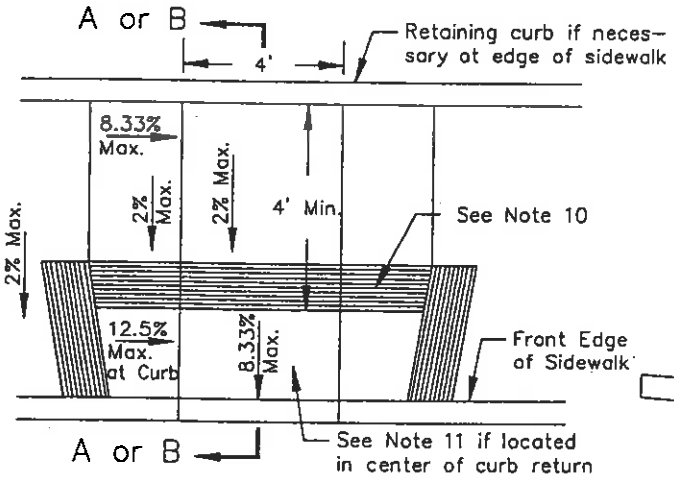

CASE B

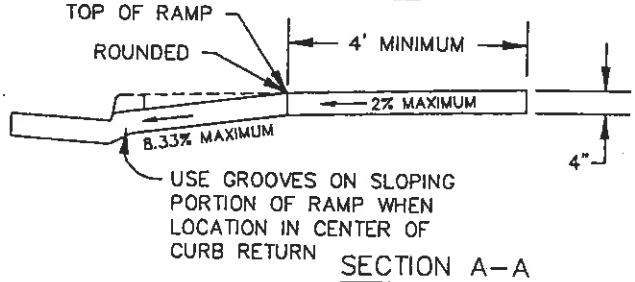

SECTION A-A

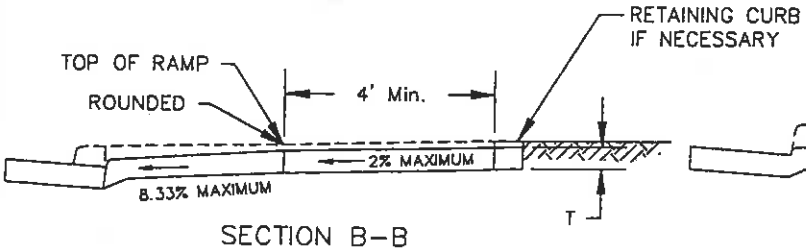

SECTION B-B

Depress entire sidewalk as required

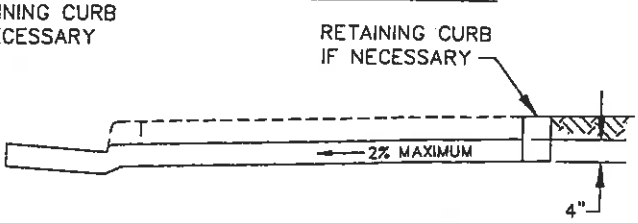

SECTION C-C

4. All concrete class A, f'c=3000psi minimum. Non-pigmented curing compound required.
3. Contact outside Agencies directly for additional conditions or permits.
2. Encroachment Permit required for work within a Public easement/ r.o.w.
1. Conform with all Federal or State safety regulations and recommendations including trench shoring (Labor Code Section 6705) and traffic control.

REV.	DATE	CHECKED	
0	1/2/92	E. U.	

GENERAL NOTES

APPROVED

CITY ENGINEER

CITY OF BELMONT

STANDARD DETAIL

WHEELCHAIR RAMP DETAIL NO. 1

SHEET 1 OF 3

SI-105

REV. 0

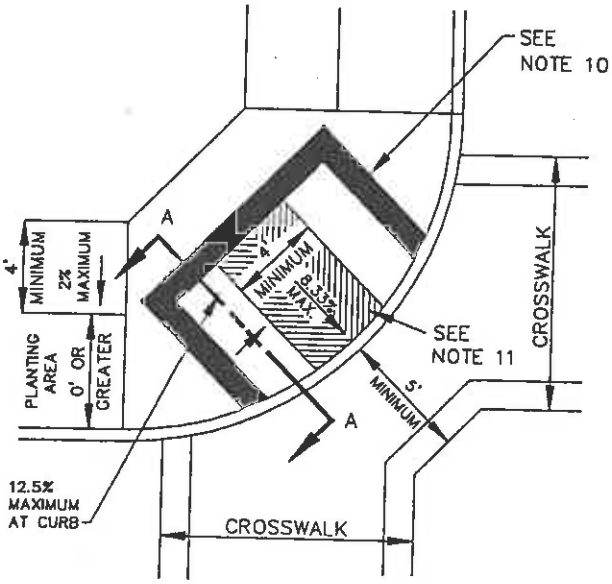

CASE E

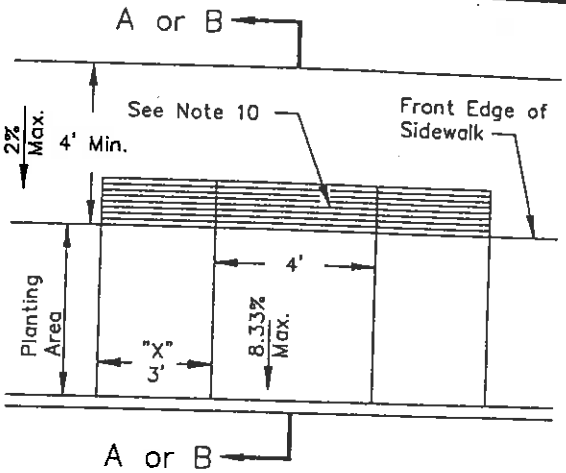

CASE G

See Note 6

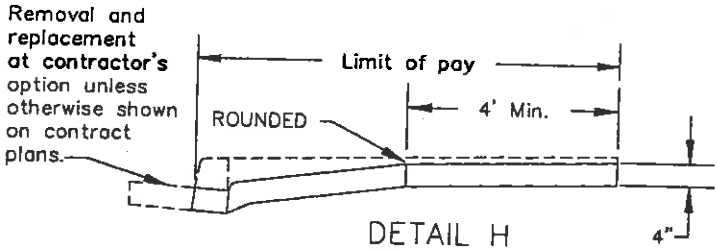

DETAIL H

Existing cub and sidewalk

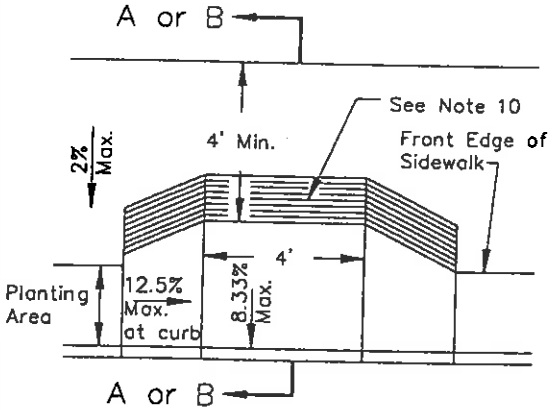

CASE F

See Note 6

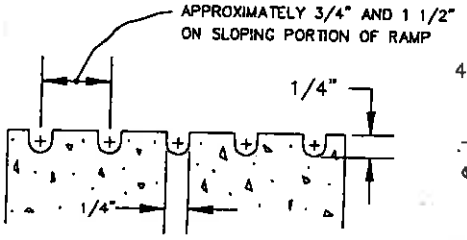

GROOVING DETAIL

LIP DETAIL

SEE NOTE 8

4. All concrete class A, fc=3000psi minimum. Non-pigmented curing compound required.
3. Contact outside Agencies directly for additional conditions or permits.
2. Encroachment Permit required for work within a Public easement/ r.o.w.
1. Conform with all Federal or State safety regulations and recommendations including trench shoring (Labor Code Section 6705) and traffic control.

REV.	DATE	CHECKED	
0	1/2/92	E. U.	

GENERAL NOTES

APPROVED

CITY ENGINEER

CITY OF BELMONT

STANDARD DETAIL

WHEELCHAIR RAMP DETAIL NO. 1

SHEET 2 of 3

SI-105

REV. 0

NOTES:

1. If distance from curb to back of sidewalk is too short to accommodate ramp and 4' platform as in Case A, the sidewalk may be depressed longitudinally as in Case B or C or may be widened as in Case D.

2. If sidewalk is less than 5' wide, the full width of the sidewalk shall be depressed as shown in Case C.

3. As an alternate to Case A, one ramp may be placed in the center of the curb return as in Case E.

4. When ramp is located in center of curb return, crosswalk configuration must be similar to that shown on the plan to accommodate wheelchairs.

5. If planting area width is equal to or greater than ramp length, ramp side slope "X" distance = 3' (See Case G.)

6. For Cases F and G, the longitudinal portion of the sidewalk may need to be depressed as shown in Case B.

7. If located on a curve the sides of the ramp need not be parallel, but the minimum width of the ramp shall be 4'.

8. The bottom of the ramp shall gave a 1/2" lip at 45 degrees.

9. Sidewalk and ramp thickness, "T," shall be 3 1/2".

10. The ramp shall have a 12" wide border with 1/4" grooves approximately 3/4" o.c. See grooving detail. The surface of ramp shall have a transverse broomed surface texture rougher than the surrounding sidewalk except when located in center of curb return.

11. When ramp is located in center of curb return, it shall be grooved in a herringbone pattern with 1/4" grooves approximately 1 1/2" o.c. see grooving detail. Grooves should be aligned parallel to crosswalk stripes to direct blind pedestrians into appropriate crosswalk.

12. Ramp side slope varies uniformly from a maximum of up to 12.5 % at curb to conform with longitudinal sidewalk slope adjacent to top of the ramp, except in Cases C and G.

13. RETROFITS: When a wheelchair ramp is added to an existing facility, the following changes are permitted:
    (A) Ramp grade in Case C may be increased to 4 %.
    (B) Other ramp grades may be increased to a maximum of11.1 %. (Nevertheless, they should be as flat as feasible.)
    (C) Where the 4' platform is not feasible, the width may be decreased to 3'.
    (D) The platform may be eliminated if the grade does not exceed 8.33 %.

Taken from State of California, Department of Transportation, standard drawings, January 1988.

REV.	DATE	CHECKED	
0	1/2/92	E. U.	

APPROVED

CITY ENGINEER

CITY OF BELMONT

GENERAL NOTES

STANDARD DETAIL

WHEELCHAIR RAMP DETAIL NO.1

SHEET 3of3

SI-105

REV. 0

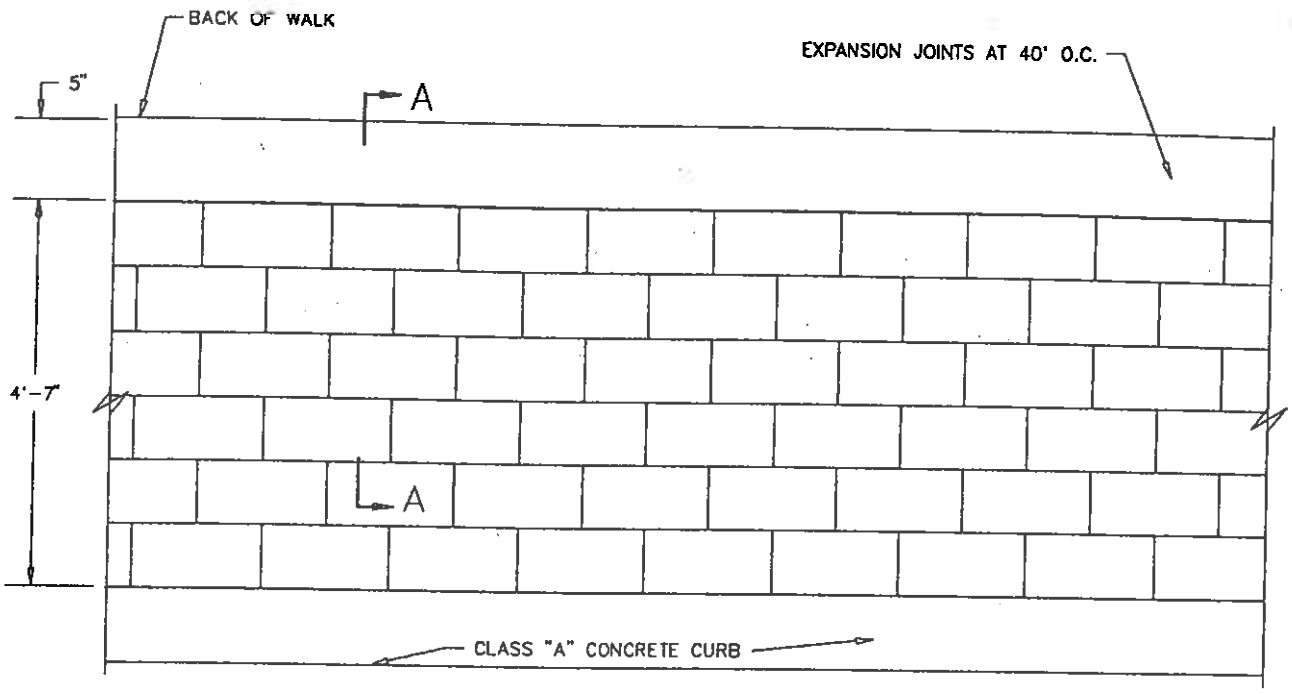

SIDEWALK PLAN

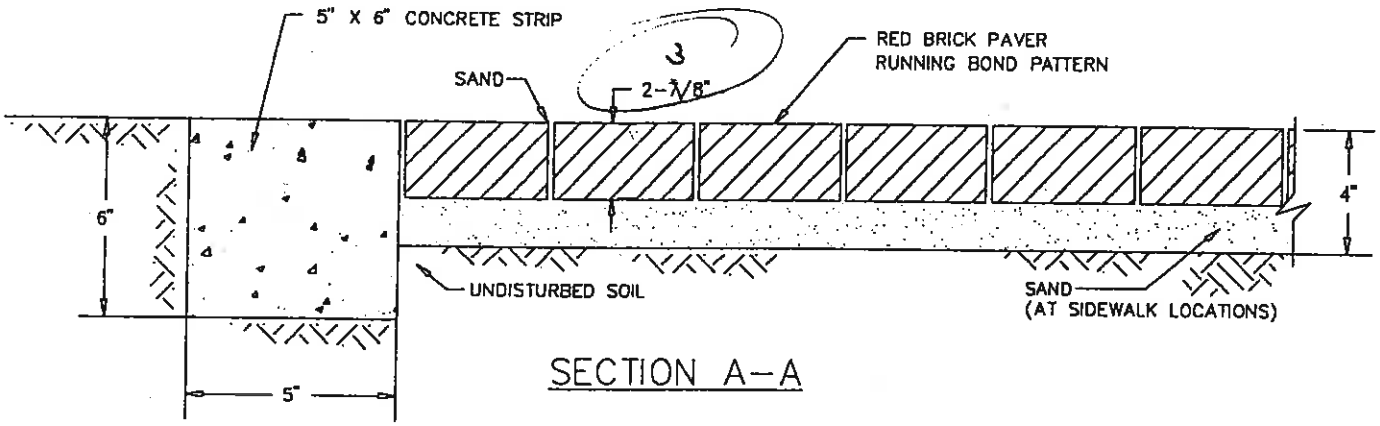

SECTION A-A

BRICK PAVER MATERIAL
TYPE: HOLLAND
COLOR: B2
MFG: PACIFIC PAVING STONE INTERLOCK
P.O. BOX 1480
CUPERTINO, CA 95015

NOT TO SCALE

4. All concrete class B, f'c=3000psi minimum. Non-pigmented curing compound required.
3. Contact outside Agencies directly for additional conditions or permits.
2. Encroachment Permit required for work within a Public easement/ r.o.w.
1. Conform with all Federal or State safety regulations and recommendations including trench shoring (Labor Code Section 6705) and traffic control.

REV.	DATE	CHECKED	
0	4/92	E. U.	

GENERAL NOTES

APPROVED

STANDARD DETAIL

SIDEWALK IN COMMERCIAL AREAS WITHIN THE REDEVELOPMENT DISTRICT

SHEET SI-106

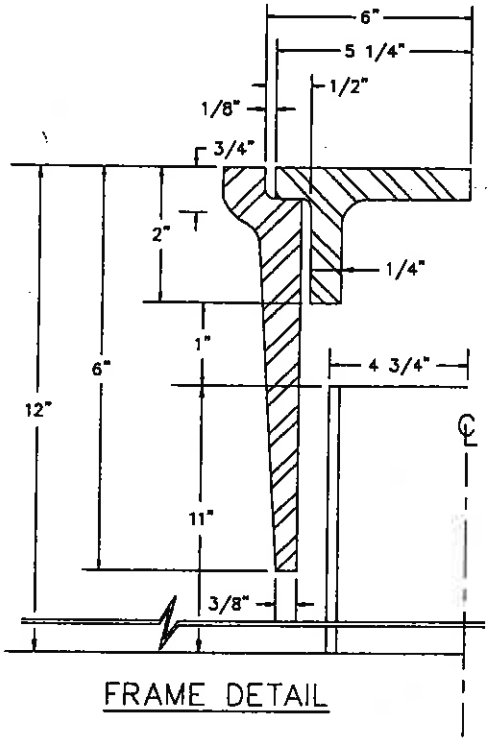

FRAME DETAIL

NOTES

1. Registered Engineer or Land Surveyor No. and year shall be 3/16" min. stamp on plate.
2. Monument mark shall be 1/8" dia. drilled hole or well defined punch mark and cross placed within the clear center area of the plate, set by registered Engineer or Land Surveyer.
3. Frame fillets and rounds 1/4"

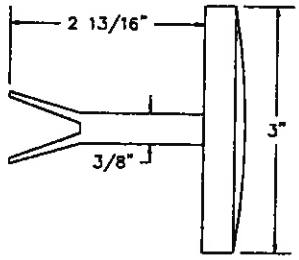

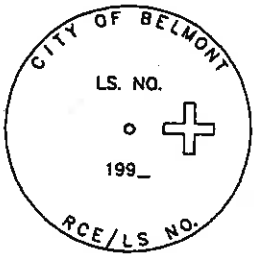

BRASS PLATE

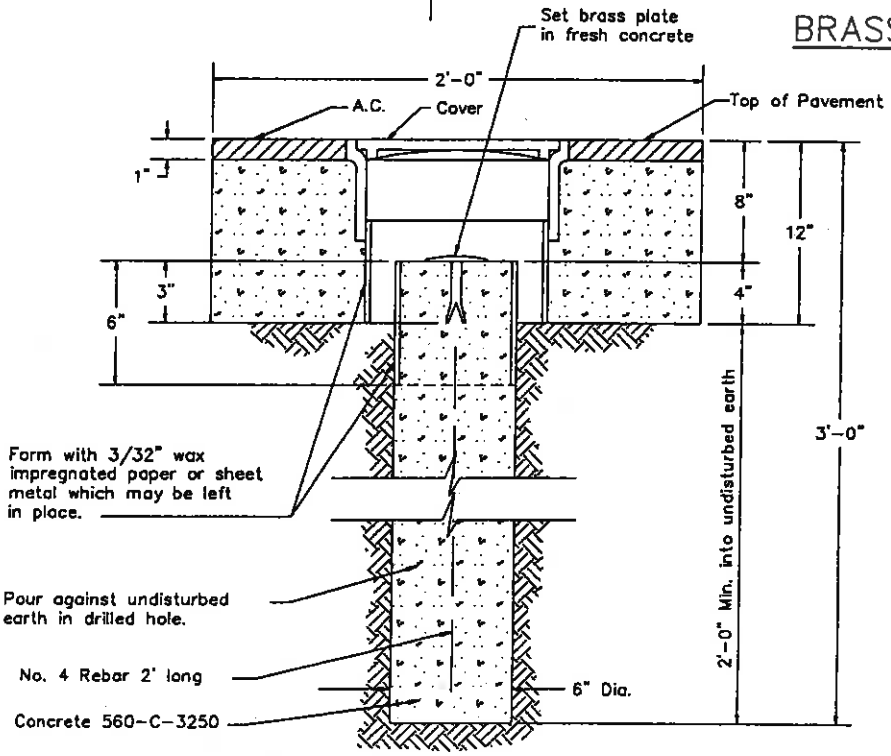

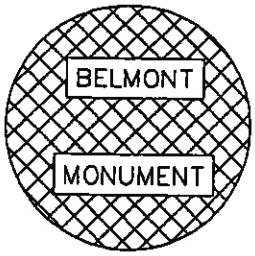

COVER
To Monument Box

0	4/92	E. L	
REV.	DATE	CHECKED	

APPROVED

CITY ENGINEER

CITY OF BELMONT

GENERAL NOTES

STANDARD DETAIL

STREET SURVEY
MONUMENT AND BOX

SHEET
SI-108
REV. 0

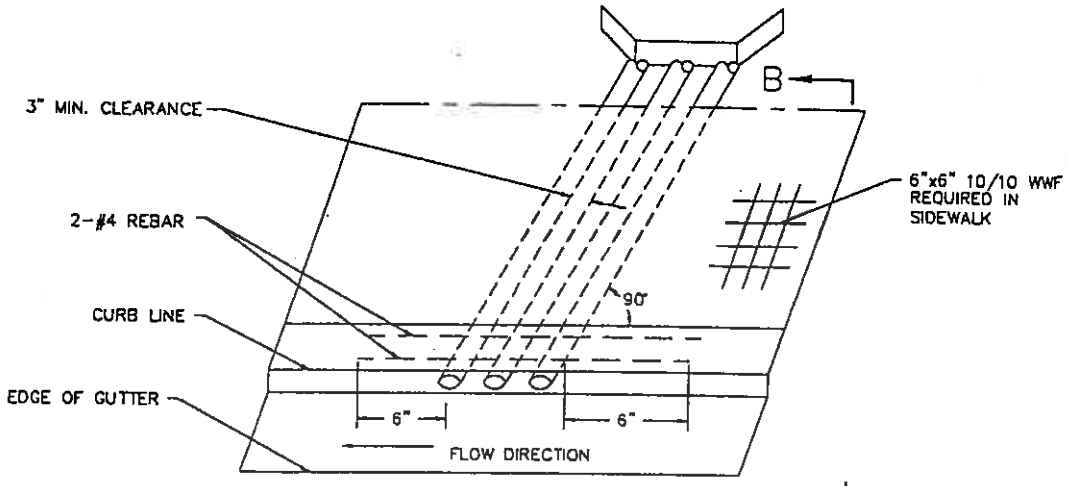

ISOMETRIC VIEW

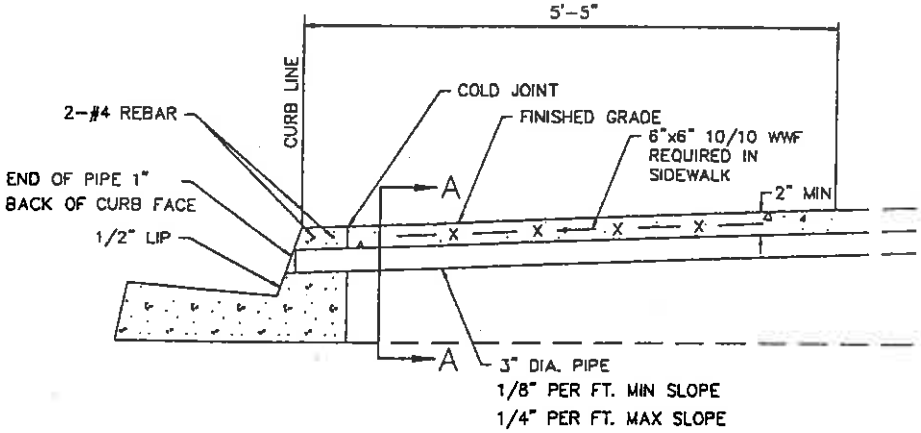

SECTION B-B

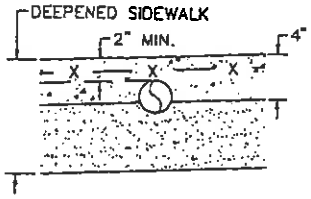

SECTION A-A

NOTES:

1. DRAINS SHALL BE 3-INCH DIAMETER PIPES FOR 6-INCH CURB FACE OR GREATER UNLESS OTHER SHAPES ARE APPROVED BY THE ENGINEER.
2. ANGLE '0'=90', UNLESS OTHERWISE SPECIFIED.
3. THE NUMBER OF PIPES AT ANY LOCATION SHALL NOT EXCEED 4.
4. ADAPTED FROM APWA SO. CAL. CHAPTER.

1. All concrete class A - 3000psi strength. Non-pigmented curing compound required.
2. Contact outside Agencies directly for additional conditions or permits.
3. Encroachment Permit required for work within a Public easement/ r.o.w.
4. Conform with all Federal or State safety regulations and recommendations including trench shoring (Labor Code Section 6705) and traffic control.

REV.	DATE	CHECKED	
0	4/92	E.L.	

GENERAL NOTES

APPROVED

CITY ENGINEER

CITY OF BELMONT

STANDARD DETAIL

CURB DRAIN

SHEET SI-109

REV. 0

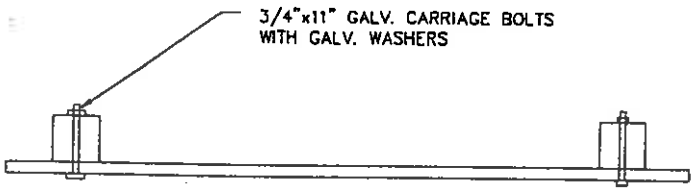

PLAN

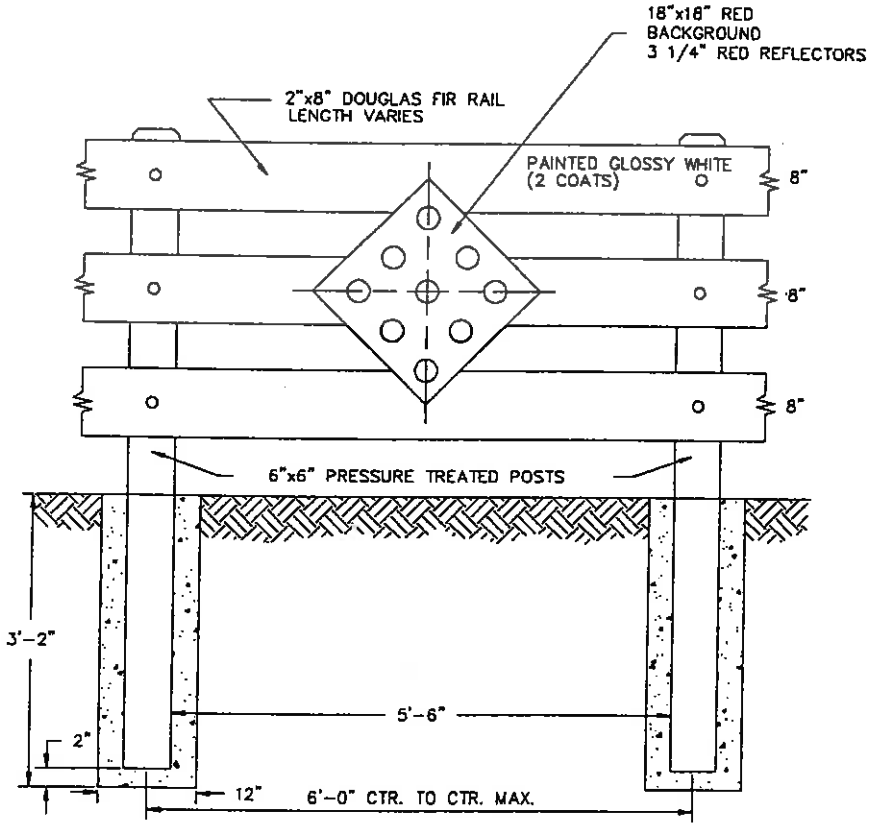

FRONT ELEVATION

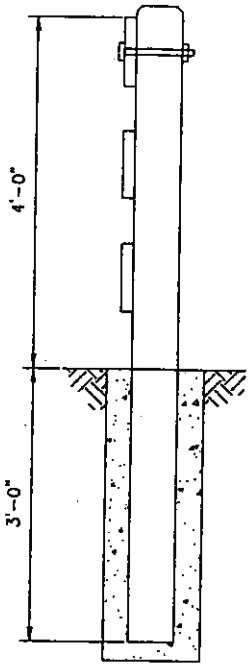

SIDE ELEVATION

1. All concrete class B – 2500psi strength.
2. Contact outside Agencies directly for additional conditions or permits.
3. Encroachment Permit required for work within a Public easement/ r.o.w.
4. Conform with all Federal or State safety regulations and recommendations including trench shoring (Labor Code Section 6705) and traffic control.

REV.	DATE	CHECKED	
0	4/92	E.U.	

GENERAL NOTES

APPROVED

CITY ENGINEER

CITY OF BELMONT

STANDARD DETAIL

BARRICADES FOR DEAD END STREETS

SHEET SI-110

REV. 0

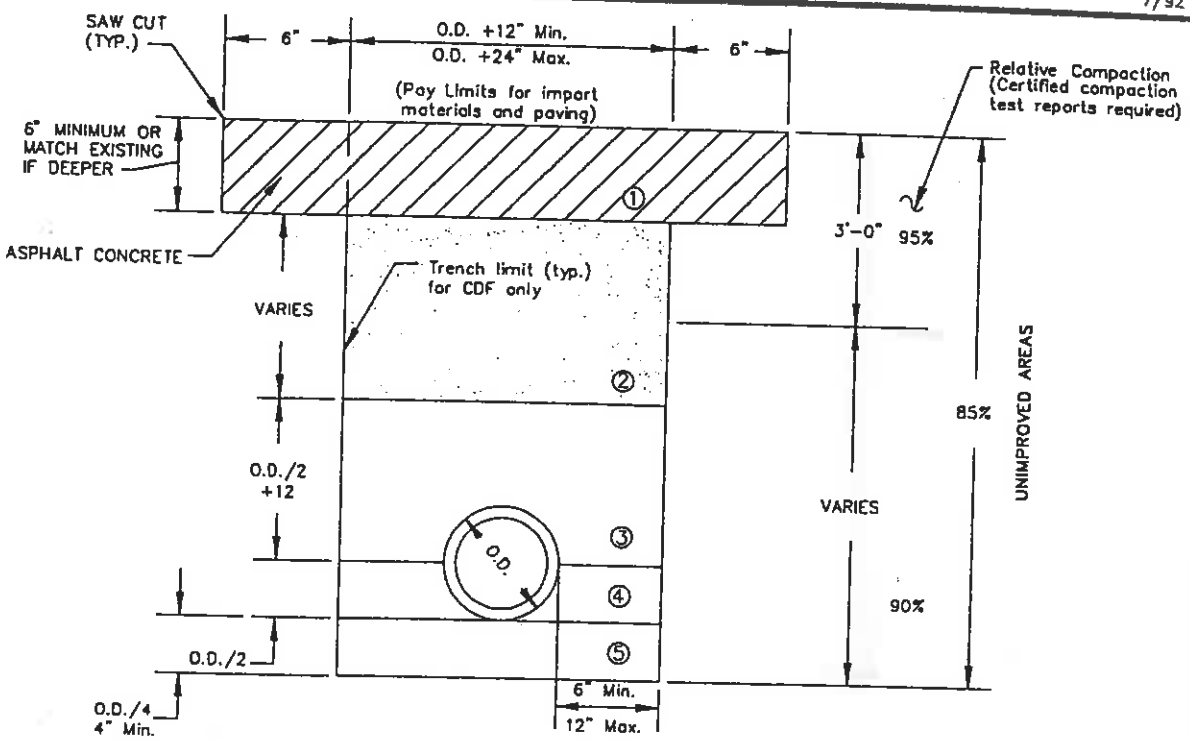

TRENCH SECTION

BEDDING CLASSES AND TRENCH BACKFILL MATERIALS

BEDDING CLASS	A-2	A-1	A	A-0	B-2	B-1	C	D	CLASS II
LOAD FACTOR	4.5	3.2	3.0	2.3	1.9	1.5	1.5	1.1	

MATERIAL LOCATION	BACKFILL MATERIALS						COMPACTION METHOD
①	Street Areas – 6" Asphalt Concrete Unimproved Areas – Aggregate Base or Native Material, as directed by the Engineer.						Mechanical (Except unimproved areas may be jetted with Engineer's approval)
②	Crushed Aggregate Base or Approved Native Material, as directed by the Engineer, or approved CDF.						Mechanical Compaction Exceptions:
③	Vibrated Concrete	Crushed Aggregated Base or Approved Native Material, except Sand for V.C.P.					When sand is used it shall be jetted or vibrated. No compaction necessary for CDF.
④	Vibrated Concrete				Sand or approved CDF.	Crushed Aggregate Base or Approved Native Material Except Sand for V.C.P., or approved CDF.	
⑤	Vibrated Concrete	Sand or Drain Rock	Vibrated Concrete	Sand or 3/4" max. crushed rock.			Mechanical compaction or jetted as directed by the Engineer.

6. Jetting (hydraulic compaction) shall be minimized to prevent saturation (Recycled water shall be used.)
7. CDF = Concrete Designed Fill.
8. When working over Bay mud: Weight of backfill including pipe and contents shall not exceed weight of material excavated.

1. All concrete class B – 2500psi strength.
2. Contact outside Agencies directly for additional conditions or permits.
3. Encroachment Permit required for work within a Public easement/ r.o.w.
4. Conform with all Federal or State safety regulations and recommendations including trench shoring (Labor Code Section 6705) and traffic control.
5. Saw cut side on score marks only

REV.	DATE	CHECKED	
0	8/92	E.J.	

GENERAL NOTES

APPROVED

CITY ENGINEER

CITY OF BELMONT

STANDARD DETAIL

TRENCH DETAIL

SHEET SI-111

REV. 0

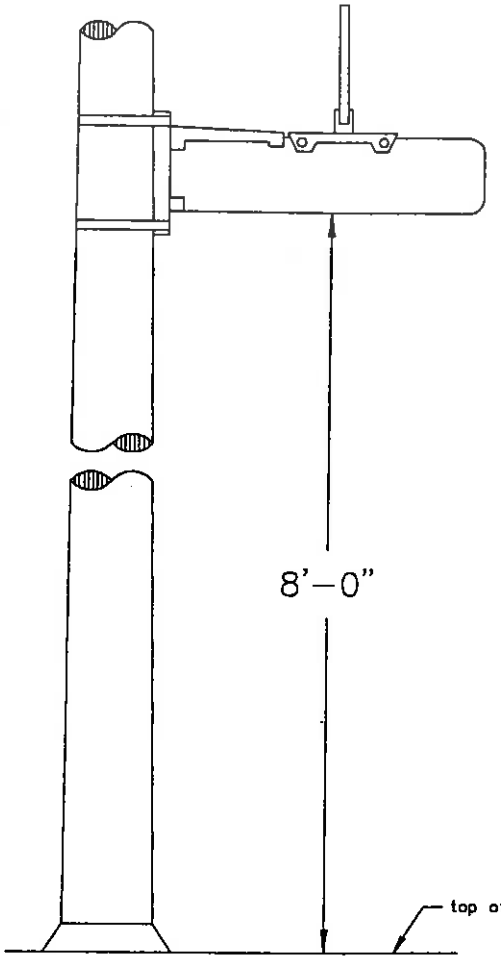

ELECTROLIER MOUNTING

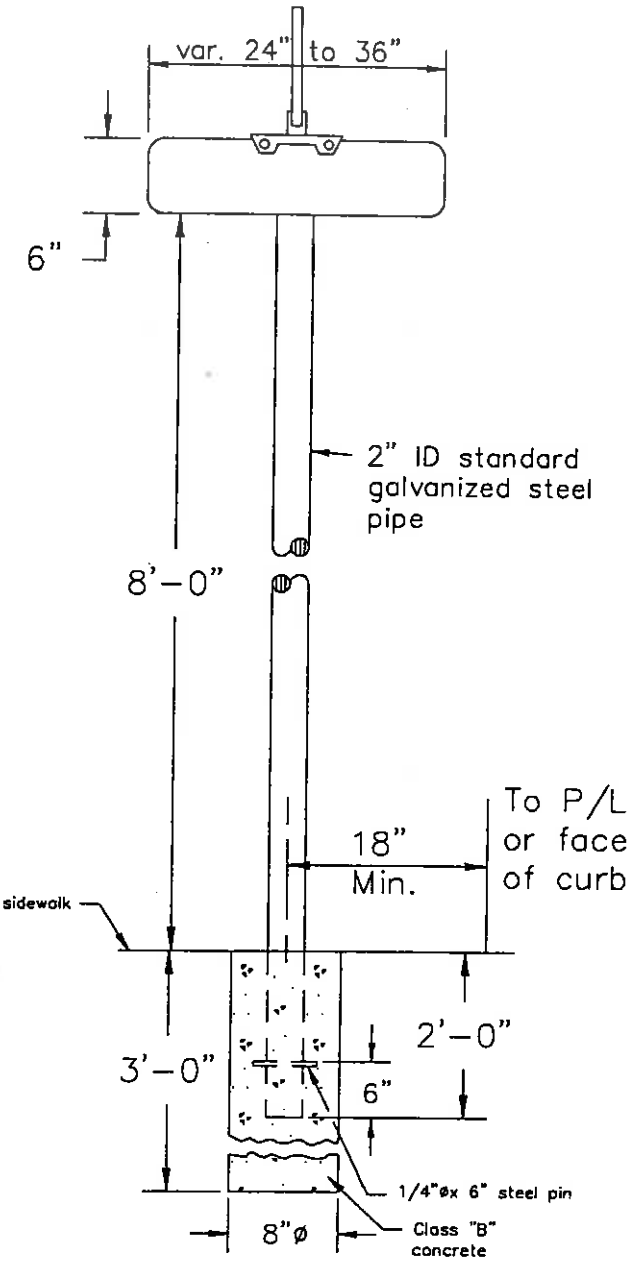

POST TOP MOUNTING

Wherever parctical street name signs shall be installed on electrolier poles. Sign hardware shall be HAWKINS "SLOTTED-LOCK" or equal.
Sign faces shall be white lettering on green reflective sheeting per City Standard Specifications For Traffic Signs.

1. All concrete class B – 2500psi strength. Non-pigmented wiring compound required.
2. Contact outside Agencies directly for additional conditions or permits.
3. Encroachment Permit required for work within a Public easement/ r.o.w.
4. Conform with all Federal or State safety regulations and recommendations including trench shoring (Labor Code Section 6705) and traffic control.

REV.	DATE	CHECKED
0	4/92	E. L.

GENERAL NOTES

APPROVED

CITY ENGINEER

CITY OF BELMONT

STANDARD DETAIL

STANDARD STREET NAME SIGN

SHEET SI-112

REV. 0

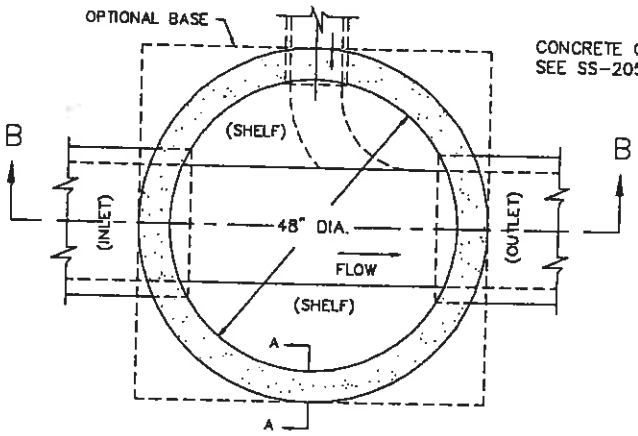

PLAN

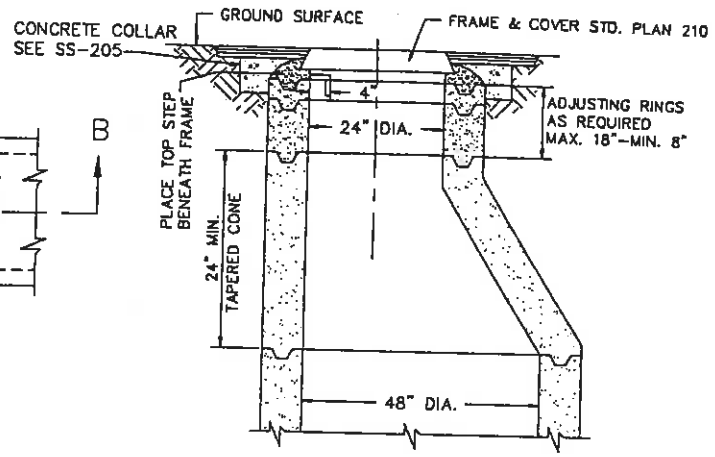

SECTION B-B

ALTERNATE SECTION MAY BE USED IF SPECIFIED IN BID DOCUMENTS.

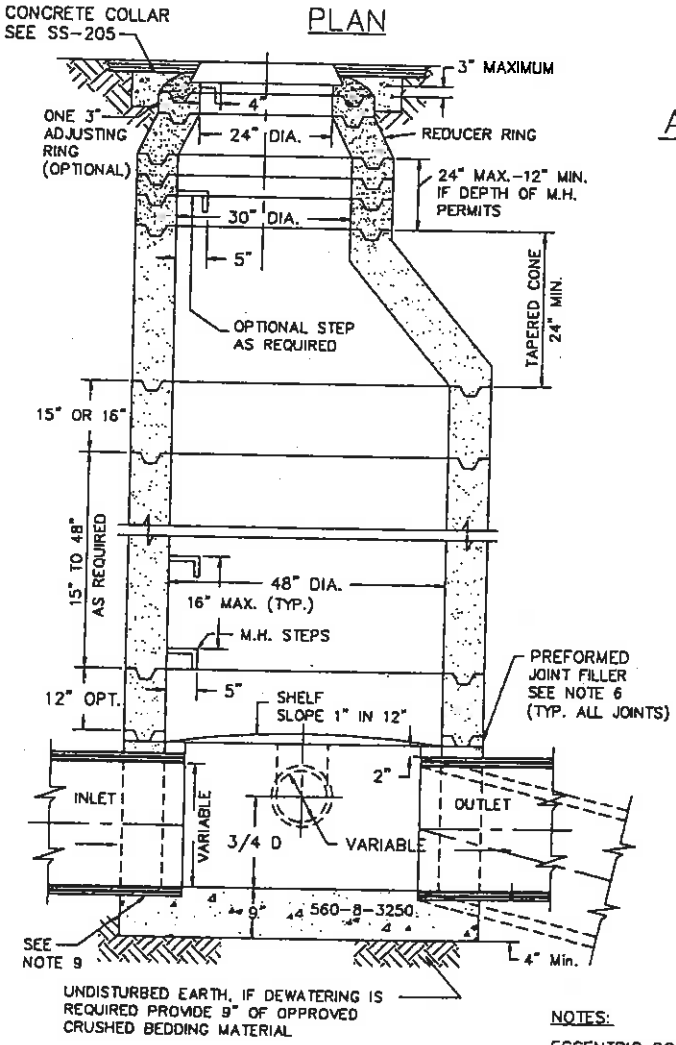

SECTION B-B

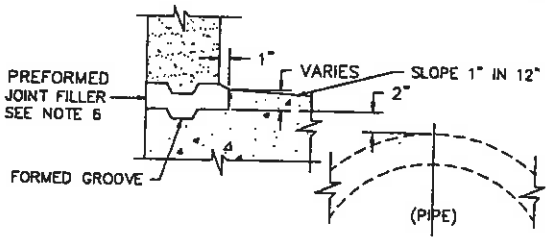

SECTION A-A

NOTES:

ECCENTRIC CONES SHALL BE MOUNTED WITH OPENING DIRECTLY OVER SHELF, NEVER OVER INLET OR OUTLET PIPES.

ADOPTED FROM APWA-SCC STANDARD DRAWINGS

REV.	DATE	CHECKED	
0	1/2/92	E.U.	

GENERAL NOTES

APPROVED

CITY ENGINEER

CITY OF BELMONT

STANDARD DETAIL

PRECAST CONCRETE SEWER MANHOLE

SHEET 1 of 2

SS-200

REV. 0